CHARTING A COURSE FOR SUCCESS: AMERICA'S STRATEGY FOR STEM EDUCATION

A Report by the

COMMITTEE ON STEM EDUCATION

of the

NATIONAL SCIENCE & TECHNOLOGY COUNCIL

December 2018

About the National Science and Technology Council

The National Science and Technology Council (NSTC) is the principal means by which the Executive Branch coordinates science and technology policy across the diverse entities that make up the Federal research and development enterprise. A primary objective of the NSTC is to ensure that science and technology policy decisions and programs are consistent with the President's stated goals. The NSTC prepares research and development strategies that are coordinated across Federal agencies aimed at accomplishing multiple national goals. The work of the NSTC is organized under committees that oversee subcommittees and working groups focused on different aspects of science and technology. More information is available at http://www.whitehouse.gov/ostp/nstc.

About the Office of Science and Technology Policy

The Office of Science and Technology Policy (OSTP) was established by the National Science and Technology Policy, Organization, and Priorities Act of 1976 to provide the President and others within the Executive Office of the President with advice on the scientific, engineering, and technological aspects of the economy, national security, homeland security, health, foreign relations, the environment, and the technological recovery and use of resources, among other topics. OSTP leads interagency science and technology policy coordination efforts, assists the Office of Management and Budget with an annual review and analysis of Federal research and development in budgets, and serves as a source of scientific and technological analysis and judgment for the President with respect to major policies, plans, and programs of the Federal Government. More information is available at http://www.whitehouse.gov/ostp.

About the Committee on STEM Education

The Committee on STEM Education (CoSTEM) was established pursuant to the requirements of Section 101 of the America COMPETES Reauthorization Act of 2010 (42 U.S.C. §6621). In accordance with the Act, the Committee reviews science, technology, engineering, and mathematics (STEM) education programs, investments, and activities, and the respective assessments of each, in Federal agencies to ensure that they are effective; coordinates, with the Office of Management and Budget, STEM education programs, investments, and activities throughout the Federal agencies; and develops and implements through the participating agencies a STEM education strategic plan, to be updated every five years. The Subcommittee on Federal Coordination in STEM Education (FC-STEM) advises and assists the CoSTEM and serves as a forum to facilitate the formulation and implementation of the strategic plan.

About this Document

This document presents the Federal Government's five-year strategic plan for STEM education, based on a vision for a future where all Americans will have lifelong access to high-quality STEM education and the United States will be the global leader in STEM literacy, innovation, and employment. The plan accordingly strengthens the Federal commitment to equity and diversity, to evidence-based practice, and to engagement with the national STEM community through a nationwide collaboration with learners, families, educators, communities, and employers. Beyond guiding Federal activities and investments, it is intended to serve as a "North Star" for the broader community to help achieve the goals, pathways, and objectives within this plan.

Copyright Information

This document is a work of the United States Government and is in the public domain (see 17 U.S.C. §105). Subject to the stipulations below, it may be distributed and copied with acknowledgment to OSTP. Copyrights to graphics included in this document are reserved by the original copyright holders or their assignees and are used here under the Government's license and by permission. Requests to use any images must be made to the provider identified in the image credits or to OSTP if no provider is identified. Printed in the United States of America, 2018.

Front Cover

NASA/European Space Agency Hubble Space Telescope image of a galaxy named NGC 7250. The bright object seen in this Hubble image is a single and little-studied star named TYC 3203-450-1, located in the constellation of Lacerta (The Lizard). See https://images.nasa.gov/details-GSFC_20171208_Archive_e000084.html.

NATIONAL SCIENCE & TECHNOLOGY COUNCIL

Chair (Acting)

Ted Wackler, Deputy Chief of Staff and Assistant Director, OSTP

Executive Director

Chloé Kontos, NSTC

COMMITTEE ON STEM EDUCATION

Co-Chairs

Jim Bridenstine, Administrator, NASA

France Córdova, Director, NSF

Michael Kratsios, Deputy Assistant to the President, OSTP

OSTP Liaison

Jeff Weld, Assistant Director for STEM Education

Members

James Blew, ED

Mary Cassell, OMB

Francis Collins, HHS/NIH

Paul Dabbar, DOE

Timothy Gallaudet, DOC/NOAA

Chavonda Jacobs-Young, USDA

Rosemary Lahasky, DOL

Mary Miller, DoD

David Skorton, SI

SUBCOMMITTEE ON FEDERAL COORDINATION IN STEM EDUCATION

Co-Chairs

Mike Kincaid, Associate Administrator for STEM Engagement, NASA

Karen Marrongelle, Assistant Director for Education and Human Resources, NSF

Jeff Weld, Assistant Director for STEM Education, OSTP

Executive Secretary

Susan Poland, NSF

Senior Advisor

Nafeesa Owens, NSF

Members

Jason Ackleson, DHS

James Blew, ED

Julie Carruthers, DOE

Catherine Derbes, OMB

Fred Hauchman, EPA

Grace Hu, OMB

Louisa Koch, DOC/NOAA

Kay Lund, HHS/NIH

Daniel Moore, DOS

Carol O'Donnell, SI

Jagadeesh Pamulapati, DoD

Yi Pei, OMB

Muquarrab Qureshi, USDA

Craig Robinson, DOI/USGS

Loren Smith, DOT

David Weisshaar, OMB

Bronte Wigen, DOL

STRATEGIC PLAN WRITING TEAM

Bernadette Adams, ED
Keshia Ashe, NSF
John Baek, DOC/NOAA
Andrea Cantu, DoD
Christina Chhin, ED
Julie Carruthers, DOE
Robert Ehrlich, USDA
LaShauna Evans, DOS
Richard Gilmore, NASA
Beverly Girten, NASA
James Glownia, DOE
Carol van Hartesveldt, NSF
Johnathan Holifield, DPC
Nirmala Kannankutty, NSF
Marlene Kaplan, DOC/NOAA
Danielle Kittrell, DOL
Louisa Koch, DOC/NOAA
Robert LaSalvia, NASA
Cheryl Martin, DOL
Julie Martin, NSF
Heidi McAllister, USDA
Diann McCants, DoD
Sarah-Kay McDonald, NSF
Christos Michalopoulos, DOC/NOAA
Jayne Michaud, EPA
Jean Morrow, ED
Jorge Narvaez Leon, OSTP
Carol O'Donnell, SI
Nafeesa Owens, NSF
Albert Palacios, ED
Susan Poland, NSF
Davina Pruitt-Mentle, DOC/NIST
Syed Shah, DoD
Eleanour Snow, DOI
Jake Steel, ED
Jennifer Sutton, HHS/NIH
Jeff Weld, OSTP
Jon Werner-Allen, OSTP
Lloyd Whitman, OSTP
Lee Zia, NSF

Table of Contents

Abbreviations and Acronyms iv
Executive Summary v
A Vision for STEM Education in America 1
The State of STEM Education 2
A Federal Strategy for the Next Five Years 3
Goals for American STEM Education 5
Build Strong Foundations for STEM Literacy 5
Increase Diversity, Equity, and Inclusion in STEM 5
Prepare the STEM Workforce for the Future 6
Administration Actions Laying a Foundation for this Plan 7
Pathways to Success 9
Develop and Enrich Strategic Partnerships 9
Foster STEM Ecosystems that Unite Communities 10
Increase Work-Based Learning and Training through Educator-Employer Partnerships 11
Blend Successful Practices from Across the Learning Landscape 13
Engage Students where Disciplines Converge 15
Advance Innovation and Entrepreneurship Education 16
Make Mathematics a Magnet 17
Encourage Transdisciplinary Learning 20
Build Computational Literacy 21
Promote Digital Literacy and Cyber Safety 22
Make Computational Thinking an Integral Element of All Education 23
Expand Digital Platforms for Teaching and Learning 26
Operate with Transparency and Accountability 27
Leverage and Scale Evidence-Based Practices Across STEM Communities 28
Report Participation Rates of Underrepresented Groups 30
Use Common Metrics to Measure Progress 31
Make Program Performance and Outcomes Publicly Available 32
Develop a Federal Implementation Plan and Track Progress 33
A Strategy for National Collaboration 34
Initial Stakeholder Outreach 34
Using This Plan 34
Helping Achieve the Goals 35

Abbreviations and Acronyms

CoSTEM Committee on STEM Education

CS computer science

CT computational thinking

CTE career and technical education

DOC Department of Commerce

DoD Department of Defense

DOE Department of Energy

DHS Department of Homeland Security

DOI Department of the Interior

DOL Department of Labor

DOS Department of State

DOT Department of Transportation

DPC Domestic Policy Council

ED Department of Education

EPA Environmental Protection Agency

FC-STEM Federal Coordination in STEM Education

HBCUs historically black colleges and universities

HHS Department of Health and Human Services

HSIs Hispanic-serving institutions

NASA National Aeronautics and Space Administration

NIH National Institutes of Health

NIST National Institute of Standards and Technology

NOAA National Oceanic and Atmospheric Administration

NSF National Science Foundation

NSTC National Science and Technology Council

OMB Office of Management and Budget

OSTP Office of Science and Technology Policy

PreK-12 pre-kindergarten through high school

R&D research and development

S&E science and engineering

SI Smithsonian Institution

STEM science, technology, engineering, and mathematics

U.S. United States

USDA Department of Agriculture

USGS United States Geological Survey

WBL work-based learning

Executive Summary

Since the founding of the Nation, science, technology, engineering, and mathematics (STEM) have been a source of inspirational discoveries and transformative technological advances, helping the United States develop the world's most competitive economy and preserving peace through strength. The pace of innovation is accelerating globally, and with it the competition for scientific and technical talent. Now more than ever the innovation capacity of the United States—and its prosperity and security—depends on an effective and inclusive STEM education ecosystem. Individual success in the 21st century economy is also increasingly dependent on STEM literacy; simply to function as an informed consumer and citizen in a world of increasingly sophisticated technology requires the ability to use digital devices and STEM skills such as evidence-based reasoning.

The character of STEM education itself has been evolving from a set of overlapping disciplines into a more integrated and interdisciplinary approach to learning and skill development. This new approach includes the teaching of academic concepts through real-world applications and combines formal and informal learning in schools, the community, and the workplace. It seeks to impart skills such as critical thinking and problem solving along with soft skills such as cooperation and adaptability. Basic STEM concepts are best learned at an early age—in elementary and secondary school—because they are the essential prerequisites to career technical training, to advanced college-level and graduate study, and to increasing one's technical skills in the workplace. Increasing the overall digital literacy of Americans and enhancing the STEM workforce will necessarily involve the entire U.S. STEM enterprise.

The Federal Government has a key role to play in furthering STEM education by working in partnership with stakeholders at all levels and seeking to remove barriers to participation in STEM careers, especially for women and other underrepresented groups. Accordingly, this report sets out a Federal strategy for the next five years based on a **Vision** for a future where **all Americans will have lifelong access to high-quality STEM education and the United States will be the global leader in STEM literacy, innovation, and employment**. It represents an urgent call to action for a nationwide collaboration with learners, families, educators, communities, and employers—a "North Star" for the STEM community as it collectively charts a course for the Nation's success.

This vision will be achieved by pursuing three aspirational goals:

- **Build Strong Foundations for STEM Literacy** by ensuring that every American has the opportunity to master basic STEM concepts, including computational thinking, and to become digitally literate. A STEM-literate public will be better equipped to handle rapid technological change and will be better prepared to participate in civil society.
- **Increase Diversity, Equity, and Inclusion in STEM** and provide all Americans with lifelong access to high-quality STEM education, especially those historically underserved and underrepresented in STEM fields and employment. The full benefits of the Nation's STEM enterprise will not be realized until this goal is achieved.
- **Prepare the STEM Workforce for the Future**—both college-educated STEM practitioners and those working in skilled trades that do not require a four-year degree—by creating authentic learning experiences that encourage and prepare learners to pursue STEM careers. A diverse talent pool of STEM-literate Americans prepared for the jobs of the future will be essential for maintaining the national innovation base that supports key sectors of the economy and for making the scientific discoveries and creating the technologies of the future.

The Federal strategy is built on four pathways representing a cross-cutting set of approaches, each with a specific set of objectives and priority Federal actions for achieving these goals.

Develop and Enrich Strategic Partnerships. This pathway focuses on strengthening existing relationships and developing new connections between educational institutions, employers, and their communities. That means bringing together schools, colleges and universities, libraries, museums, and other community resources to build STEM ecosystems that broaden and enrich each learner's educational and career journey. It also means engaging learners in work-based learning experiences with local employers, internships, apprenticeships, and research experiences. Having strategic partnerships also means exploring opportunities within the education community to blend formal and informal learning, and to blend curricula to enable students to complete both core academic and applied technical curricula in preparation for higher education. Together the objectives under this pathway can help retain learners interested in STEM fields and develop high-quality talent for both public and private sector employers.

Engage Students where Disciplines Converge. This pathway seeks to make STEM learning more meaningful and inspiring to students by focusing on complex real-world problems and challenges that require initiative and creativity. It promotes innovation and entrepreneurship by engaging learners in transdisciplinary activities such as project-based learning, science fairs, robotics clubs, invention challenges, or gaming workshops that require participants to identify and solve problems using knowledge and methods from across disciplines. It seeks to help students challenged in mathematics—frequently a barrier to STEM careers—by using innovative, tailored instructional methods. Another objective is teaching learners to tackle problems using multiple disciplines; for example, learning data science by combining basic mathematics, statistics, and computer science to study a societal problem. Such activities help to create a STEM-literate population and prepare Americans for the rapidly evolving workplace.

Build Computational Literacy. This pathway recognizes how thoroughly digital devices and the internet have transformed society and adopts strategies that empower learners to take maximum advantage of this change. It recognizes that digital literacy empowers people with the tools to find information, answer questions, and share ideas, and that they need to understand how to use these tools responsibly and safely. This pathway seeks to advance computational thinking as a critical skill for today's world. Computational thinking, including computer science, is not just about using computing devices effectively; more broadly, it means solving complex problems with data, a skill that can be learned at an early age. It seeks to expand the use of digital platforms for teaching and learning, because they enable anywhere/anytime learning; make possible individualized instruction customized to the way each person learns most effectively; and can offer more active and engaging learning through simulation-based activities or virtual reality experiences. These tools have the potential to decrease achievement gaps in formal educational settings and to offer rapid reskilling or upskilling opportunities in the workplace.

Operate with Transparency and Accountability. This pathway commits the Federal Government to open, evidence-based practices and decision-making in STEM programs, investments, and activities. Complementary practices by other STEM stakeholders will facilitate the entire ecosystem to collectively monitor progress towards achieving the shared national goals of this strategic plan.

These four pathways have the potential to catalyze and empower educators, employers, and communities to the benefit of learners at all levels and to society as a whole and to ensure the realization of a shared vision for American leadership in STEM literacy, innovation, and employment.

GOALS FOR AMERICAN STEM EDUCATION

⋆ Build Strong Foundations for STEM Literacy ⋆

⋆ Increase Diversity, Equity, and Inclusion in STEM ⋆

⋆ Prepare the STEM Workforce for the Future ⋆

Pathways	Objectives	DOC	DoD	DOE	DHS	DOI	DOL	DOS	DOT	ED	EPA	HHS	NASA	NSF	SI	USDA
Develop and Enrich Strategic Partnerships	Foster STEM Ecosystems that Unite Communities	●	●	●	●	●	●	●	●	●	●	●	●	●	●	●
	Increase Work-Based Learning and Training through Educator-Employer Partnerships	●	●	●	●	●	●			●	●	●	●	●	●	●
	Blend Successful Practices from Across the Learning Landscape	●	●	●	●		●	●		●	●			●	●	●
Engage Students where Disciplines Converge	Advance Innovation and Entrepreneurship Education	●	●	●				●		●	●	●		●		●
	Make Mathematics a Magnet	●	●							●				●		●
	Encourage Transdisciplinary Learning	●	●	●	●	●		●		●	●	●	●	●	●	●
Build Computational Literacy	Promote Digital Literacy and Cyber Safety	●	●		●			●		●		●		●		●
	Make Computational Thinking An Integral Element of All Education	●	●	●	●	●				●		●		●	●	●
	Expand Digital Platforms for Teaching and Learning	●		●	●			●		●				●	●	●

The table above lists the educational pathways and objectives under this strategic plan and the Federal departments and independent agencies that have STEM education programs, investments, and activities. The dots indicate the objectives each agency currently plans to contribute to through mission-specific actions, subject to budgetary constraints and other approvals.

The Federal agencies collectively plan to **Operate with Transparency and Accountability** with the following five objectives:

- Leverage and Scale Evidence-Based Practices Across STEM Communities
- Report Participation Rates of Underrepresented Groups
- Use Common Metrics to Measure Progress
- Make Program Performance and Outcomes Publicly Available
- Develop a Federal Implementation Plan and Track Progress

All Americans will have lifelong access to high-quality STEM education and the United States will be the global leader in STEM literacy, innovation, and employment.

A Vision for STEM Education in America

Science, technology, engineering, and mathematics (STEM) have been the foundation for discovery and technological innovation throughout American history. Americans with a strong foundation in STEM have electrified the Nation, harnessed the power of the atom, put men on the Moon and rovers on Mars, developed the internet, designed computers that fit in your pocket, created imaging machines that reveal the inner workings of the body, and decoded the human genome. These stunning achievements have transformed the human experience, inspired generations, and fostered the strong public support for STEM education and research.

The pace of global innovation is accelerating along with the competition for scientific and technical talent. Today, the economic prosperity and national security of the United States rests increasingly on its capacity for continued scientific and technological innovation. America's national innovation base depends more than ever on a strong, cross-sector collaboration around common STEM education interests and goals—a STEM ecosystem—that can provide all Americans with access to high-quality STEM education throughout their lifetimes. Establishing a path to basic STEM literacy for everyone is vital to preparing a diverse workforce needed for the United States to lead and prosper in an increasingly competitive world driven by advanced technology.

Over the past 25 years, STEM education has been evolving from a convenient clustering of four overlapping disciplines toward a more cohesive knowledge base and skill set critical for the economy of the 21st century. The best STEM education provides an interdisciplinary approach to learning, where rigorous academic concepts are coupled with real-world applications and students use STEM in contexts that make connections between school, community, work, and the wider world. Leaders in STEM education continue to broaden and deepen its scope and further transcend the fields of study beyond just a combination of the four disciplines to include the arts and humanities. Modern STEM education imparts not only skills such as critical thinking, problem solving, higher order thinking, design, and inference, but also behavioral competencies such as perseverance, adaptability, cooperation, organization, and responsibility.

The American STEM enterprise is composed of a constellation of public and private sector organizations providing education and training in myriad ways and conducting research and development (R&D) across all sectors of the economy. STEM education and training occurs from pre-kindergarten to high school (preK-12); both in school and after school; from undergraduate to postdoctoral studies; and through technical education, internships, apprenticeships, community colleges, and retraining programs. Although preK-12 education in the United States is primarily a State, local, and Tribal responsibility, the Federal Government plays an important role in fostering educational excellence, including supporting and disseminating the latest discoveries on what works in teaching and learning and facilitating equal access. Federal agencies support education and workforce development programs and sustain the national R&D enterprise through ongoing support of post-secondary education and R&D, including R&D that captures the imagination of the public and inspires the next generation of STEM learners.

The State of STEM Education

The United States has a higher education system that is the envy of the world, providing undergraduate and graduate degrees in STEM and conducting research that is an engine for American prosperity and security. That engine depends upon a diverse pool of well-prepared students. Even for those not headed for higher education, STEM skills are increasingly important for all career paths and for all people to succeed throughout their lives. STEM skills such as computational thinking, problem-finding and solving, and innovation are crucial for people working to manufacture smarter products, improve healthcare, and safeguard the Nation, and these skills are valuable assets across many other fields and job categories. The success of the Nation demands a STEM-literate modern workforce and Americans adept at navigating an increasingly high-tech, digital, and connected world.

Recognizing that a quality STEM education should be accessible to Americans of all ages, backgrounds, communities, and career paths, organizations from across the entire STEM ecosystem have been working to improve STEM education and training, with many examples of success. STEM-focused schools and informal learning programs have been established across the country. Federal investments are supporting a wide spectrum of STEM education activities spanning all age groups and learning environments. Businesses, nonprofits, and professional societies have built programs to support STEM learners, both locally and nationally. These successes form a foundation upon which to build much-needed improvements in STEM education and keep the United States globally competitive.

According to the National Science Board's *Science and Engineering Indicators 2018,*[1] Americans' basic STEM skills have modestly improved over the past two decades but continue to lag behind many other countries. According to the *Indicators*, from 2006–2015, American 15-year-olds still tended to score below the international average in mathematics skills, and at or slightly above the international average in science skills. Recent data from a test commonly taken by college-bound high school students found that only 20% are ready for courses typically required for a STEM major.[2] Other countries are doing a better job preparing their students: the *Indicators* show that in the past 15 years, India and China have outpaced the United States in the number of science and engineering (S&E) bachelor's degrees conferred. Together, these two countries have produced almost half of the total degrees, with India at 25% and China at 22% of the global total. By comparison, American S&E bachelor's degrees comprised only 10% of the global total, while the demand from U.S. employers for graduates with STEM degrees continues to grow.[3]

STEM employment in the United States continues to grow at a faster pace than employment in other occupations, and STEM workers command higher wages than their non-STEM counterparts. STEM degree holders enjoy higher earnings, regardless of whether they work in STEM or non-STEM occupations.[4] Despite the value and importance of STEM skills, not all Americans have equal access to STEM education or are equally represented in STEM fields. Women, persons with disabilities, and three racial and ethnic groups—Blacks or African Americans, Hispanics or Latinos, and American Indians or

[1] https://www.nsf.gov/statistics/2018/nsb20181/report

[2] http://www.act.org/content/dam/act/unsecured/documents/cccr2018/National-CCCR-2018.pdf

[3] https://www.bls.gov/spotlight/2017/science-technology-engineering-and-mathematics-stem-occupations-past-present-and-future/home.htm

[4] https://www.commerce.gov/news/reports/2017/03/stem-jobs-2017-update

Alaska Natives—are significantly underrepresented in S&E education and employment.[5] As also reported in the *Indicators*, although women make up half the population, they comprise less than 30% of the STEM workforce. Similarly, underrepresented racial and ethnic groups make up 27% of the population but comprise only 11% of the STEM workforce. People with disabilities and veterans also face barriers to participating in STEM education and occupations. Americans from all backgrounds may experience geographic disparities that affect access; for example, of the 24 million Americans who lack access to basic broadband services, 83% live in rural or Tribal communities.[6] Although improved access to STEM education on its own will not create equal representation within STEM fields, equitable access is an essential priority for the Nation.

More than a decade of studies by the National Academies of Sciences, Engineering, and Medicine document the need to prepare learners for the jobs of the future and identify a host of challenges and opportunities within the U.S. STEM education ecosystem.[7] In the past year alone, Federal strategic plans and reports have called out the importance of STEM education to achieving national goals in areas including national security,[8] artificial intelligence,[9] cybersecurity,[10] quantum information science,[11] and advanced manufacturing.[12] There can be no doubt that STEM education continues to be a significant priority for the United States.

A Federal Strategy for the Next Five Years

This document presents the Federal Government's five-year strategic plan for STEM education and is responsive to the requirements of Section 101 of the America COMPETES Reauthorization Act of 2010. This plan strengthens the Federal commitment to equity and diversity, to evidence-based practices, and to engagement with the national STEM community through a nationwide collaboration with learners, families, educators, community leaders, and employers. Beyond guiding the Federal agency actions over the next five years,[13] it is intended to serve as a "North Star" for the STEM community as it charts a course for collective success. The Federal Government encourages STEM education stakeholders from across the Nation to support the goals of this plan through their own actions, as summarized in the final section of this document (A Strategy for National Collaboration).

This strategic plan is a product of extensive input from stakeholders representing the broad STEM education ecosystem—Federal, State, Territorial, Tribal, and local; public and private; formal and

---

[5] https://nsf.gov/statistics/2017/nsf17310/digest/introduction/

[6] https://www.fcc.gov/reports-research/reports/broadband-progress-reports/2018-broadband-deployment-report

[7] http://sites.nationalacademies.org/pga/pga_041693

[8] https://www.whitehouse.gov/wp-content/uploads/2017/12/NSS-Final-12-18-2017-0905.pdf

[9] https://www.whitehouse.gov/wp-content/uploads/2018/05/Summary-Report-of-White-House-AI-Summit.pdf

[10] https://www.whitehouse.gov/wp-content/uploads/2018/09/National-Cyber-Strategy.pdf

[11] https://www.whitehouse.gov/wp-content/uploads/2018/09/National-Strategic-Overview-for-Quantum-Information-Science.pdf

[12] https://www.whitehouse.gov/wp-content/uploads/2018/10/Advanced-Manufacturing-Strategic-Plan-2018.pdf

[13] Within this document Federal departments, independent agencies, and commissions are referred to collectively as "agencies."

informal—including the STEM Education Advisory Panel.[14] The strategy realigns the focus of Federal agency STEM education programs, investments, and activities with the priorities and needs of both the Administration and the national STEM community. Accordingly, the plan reflects multiple new and renewed areas of emphasis, such as education-employer partnerships leading to work-based learning and the development of America's skilled technical workforce. It emphasizes the importance of building connections across disciplines of study, across formal and informal education, and across communities. It highlights the need for innovation and entrepreneurship education, the value of universal competencies in computational thinking, the power of digital educational tools, and the need for digital literacy. Finally, this plan emphasizes the commitment of Federal agencies to transparency and accountability in their implementation of this strategy and in reporting progress and outcomes.

This strategic plan is based on a **Vision** for a future where **all Americans have lifelong access to high-quality STEM education and the United States is the global leader in STEM literacy, innovation, and employment**. This vision will be achieved by pursuing the following three goals representing aspirational intentions to be strived for as a Nation:

- **Build Strong Foundations for STEM Literacy**
- **Increase Diversity, Equity, and Inclusion in STEM**
- **Prepare the STEM Workforce for the Future**

In formulating how these goals could be fulfilled, it became clear that many of the same approaches and objectives were needed to address multiple goals. For example, all three goals would benefit from increasing the involvement of communities in STEM education. Making computational thinking an integral element of all educational activities will have a similarly broad impact if done inclusively. Therefore, the strategy is built on the following four pathways representing a cross-cutting set of approaches:

- Develop and Enrich Strategic Partnerships
- Engage Students where Disciplines Converge
- Build Computational Literacy
- Operate with Transparency and Accountability

Each pathway includes a set of objectives that represent the priorities that the Administration has identified for the success of this plan. Each objective includes a discussion of why it is of central importance, a summary of how the Federal Government plans to reach the objective, and an initial set of key actions that will move each objective forward. A table identifying which Federal agencies will contribute to each of the educational objectives is included in the Executive Summary. Agencies will identify additional specific and measurable actions through an implementation plan to be developed following the release of this strategy.[15]

Finally, throughout the document are vignettes illustrating recent Federal programs, investments, or activities that align with the objectives. Through these examples, Federal agencies may learn about opportunities they might join or replicate with other partners, and others in the STEM education community may find inspiration for local or regional programming.

---

[14] See the final section of this document and https://www.nsf.gov/news/news_summ.jsp?cntn_id=295999.

[15] All Federal activities listed in this strategic plan are subject to budgetary constraints and other approvals, including the weighing of priorities and available resources by the Administration in formulating its annual budget and by Congress in legislating appropriations.

Goals for American STEM Education

The Plan's three goals provide overarching guidance for Federal agencies in prioritizing their investments and interagency coordination and collaboration activities, and can serve as a framework for the national stakeholder community to contribute to this strategy's success.

Build Strong Foundations for STEM Literacy

The Nation is stronger when all Americans benefit from an education that provides a strong STEM foundation for fully engaging in and contributing to their communities, and for succeeding in STEM-related careers, if they choose. STEM literacy depends on access to high-quality, lifelong STEM learning for all Americans. Even for those who may never be employed in a STEM-related job, a basic understanding and comfort with STEM and STEM-enabled technology has become a prerequisite for full participation in modern society. STEM education teaches thinking and problem-solving skills that are transferrable to many other endeavors. STEM literacy gives individuals a better capacity to make informed choices on personal health and nutrition, entertainment, transportation, cybersecurity, financial management, and parenting. A STEM-literate public will be better equipped to conduct thoughtful analysis and to sort through problems, propose innovative solutions, and handle rapid technological change, and will be better prepared to participate in civil society as jurors, voters, and consumers.

Increase Diversity, Equity, and Inclusion in STEM

The national benefits of a strong STEM foundation cannot be fully realized until all members of society have equitable access to STEM education and there is much broader participation by those historically underserved and underrepresented in STEM fields and employment. A wide body of research has established that organizations that are diverse in terms of gender, race, socioeconomic status, ethnicity, ability, geography, religion, etc., and provide an inclusive environment that values diversity better retain talent, are more engaged and productive, are more innovative, and generally are higher-performing organizations.[16]

Presently, high-quality STEM opportunities are not available to all learners. Implicit bias is one factor that inhibits the realization of this goal. Disparity in the distribution of human, material, and financial resources across rural, urban, and suburban America also inhibits this goal. An effect is that Blacks or African Americans, Hispanics or Latinos, and American Indians or Alaska Natives are underrepresented in STEM fields as compared with their overall participation in the workforce.[17] Women in occupations such as computing and engineering are dramatically underrepresented given their participation in the U.S. workforce as a whole.[18] One analysis found that many additional inventions and patents, business start-ups, educational innovations, and other stunning achievements could be realized if the under-served had more equitable exposure to innovation.[19] Even in cases where they are not under-represented in a community, women and minorities face barriers to success in STEM. For example, one

[16] For example, see https://www.catalyst.org/knowledge/why-diversity-and-inclusion-matter.

[17] https://nsf.gov/statistics/2017/nsf17310/digest/introduction/

[18] https://www.nsf.gov/statistics/2018/nsb20181/report/sections/higher-education-in-science-and-engineering/undergraduate-education-enrollment-and-degrees-in-the-united-states

[19] http://www.nber.org/papers/w24062

business analysis found that although women lead 45% of all U.S. businesses, just 17 of the 225 new biotech companies launched in the last 4 years were led by women CEOs, and only four were women of color.[20]

Regardless of geography, race, gender, ethnicity, socioeconomic status, veteran status, parental education attainment, disability status, learning challenges, and other social identities, all Americans deserve the chance to master STEM skills and methods, both for their own success and for America's competitiveness. This plan sets clear expectations that STEM education practices and policies at all levels should embed the values of inclusion and equity while prohibiting discrimination.

Prepare the STEM Workforce for the Future

A diverse talent pool of Americans with strong STEM knowledge and skills prepared for the jobs of the future is essential to maintaining the national innovation base that supports key sectors of the economy, including agriculture, energy, healthcare, information and communications technologies, manufacturing, transportation, and defense, along with emerging areas like artificial intelligence and quantum information science. Since 2000, the number of degrees awarded in STEM fields has increased,[21] but labor shortages persist in certain fields requiring STEM degrees, such as computer science, data science, electrical engineering, and software development.[22] Labor shortages also exist in skilled trade fields, and many of these open positions do not require a bachelor's degree for entry into the labor market but still benefit from STEM training.[23] More opportunities for learners to acquire STEM skills and approaches would expand their career options, including careers in the Federal Government, where one in seven of the 2.1 million Federal employees occupies a STEM position.[24]

Only when Americans have strong STEM foundations, and when diversity and inclusion in STEM are achieved, will the goal of a robust STEM workforce for the future be attainable. Tomorrow's workers are today's learners, and the learning experiences provided to them will directly impact how many decide to pursue STEM careers as well as how ready they will be to do so. Many pursuing STEM careers will benefit from Federal and other investments in STEM R&D and training that support undergraduate and graduate students, technicians, early career researchers, and others who ultimately comprise a large share of the Nation's STEM workforce.

---

[20] https://magazine.awis.org/publication/?i=491204#{%22issue_id%22:491204,%22page%22:0}

[21] https://www.nsf.gov/statistics/2018/nsb20181/report/sections/higher-education-in-science-and-engineering/undergraduate-education-enrollment-and-degrees-in-the-united-states

[22] https://www.commerce.gov/news/reports/2017/03/stem-jobs-2017-update

[23] https://www.bls.gov/spotlight/2017/science-technology-engineering-and-mathematics-stem-occupations-past-present-and-future/home.htm

[24] https://www.fedscope.opm.gov/employment.asp

Administration Actions Laying a Foundation for this Plan

The Trump Administration has already taken multiple actions that will serve as a foundation for this plan. Notably, it has:

- Re-chartered the Committee on STEM Education under the National Science and Technology Council (NSTC) to provide leadership for the Nation in achieving the plan's goals;[25]
- Directed agencies to prioritize STEM workforce education and training in their fiscal year 2020 budget requests;[26]
- Established the President's National Council for the American Worker, which will raise awareness of the STEM skills gap, help expand apprenticeships, and encourage investment in worker education;[27]
- Championed and signed into law the Strengthening Career and Technical Education for the 21st Century Act (reauthorizing the Carl D. Perkins Career and Technical Education Act) to increase student access across secondary and postsecondary levels to high-quality technical education and credentialing;[28]
- Issued an Executive Order to expand apprenticeships and improve job-training programs;[29]
- Directed the Department of Education (ED) to expand access to high-quality STEM and computer science education to K-12 students;[30]
- Issued an Executive Order to protect and preserve State and local control over the curriculum and administration at educational institutions;[31] and
- Established a White House Initiative to promote excellence and innovation at historically black colleges and universities (HBCUs).[32]

These actions reflect the Administration's recognition of the importance of STEM education and training as a driver of American job creation and economic prosperity. This plan builds on these actions with a comprehensive strategy for the next five years.

[25] https://www.whitehouse.gov/ostp/nstc/

[26] https://www.whitehouse.gov/wp-content/uploads/2018/07/M-18-22.pdf

[27] https://www.whitehouse.gov/presidential-actions/executive-order-establishing-presidents-national-council-american-worker/

[28] https://www.whitehouse.gov/briefings-statements/president-donald-j-trump-committed-preparing-americas-workers-jobs-today-tomorrow/

[29] https://www.whitehouse.gov/presidential-actions/3245/

[30] https://www.whitehouse.gov/articles/president-trump-signs-memorandum-stem-education-funding/

[31] https://www.whitehouse.gov/presidential-actions/presidential-executive-order-enforcing-statutory-prohibitions-federal-control-education/

[32] https://www.whitehouse.gov/presidential-actions/presidential-executive-order-white-house-initiative-promote-excellence-innovation-historically-black-colleges-universities/

Pathways to Success

This Federal strategy for STEM education is built on the following four pathways representing a cross-cutting set of approaches to achieving the three goals (each supported by a set of priority ***objectives***):

- **Develop and Enrich Strategic Partnerships** to cultivate new or strengthen existing connections between educational entities and the broader communities they serve.
- **Engage Students where Disciplines Converge** using STEM as an interwoven and complex pursuit that blends disciplines and makes STEM learning meaningful and inspiring.
- **Build Computational Literacy** through STEM education heavily imbued with computational skills and accessed through digital means.
- **Operate with Transparency and Accountability** within Federal agencies implementing this plan, using evidence-based practices and assessments that can be emulated by other STEM stakeholders.

Develop and Enrich Strategic Partnerships

America will benefit from strategic partnerships that align what is taught and learned with what is needed at work and in the community. Cross-sector strategic partnerships are needed that better connect educational entities, employers, and the broader communities they serve in order to foster communication and better align workforce needs with educational preparation.

Federal agencies should encourage the collaboration of stakeholders in STEM ecosystems that unite a broad range of non-Federal partners: preK-12 schools, families, informal educators, community colleges and universities—including HBCUs and Hispanic-serving institutions (HSIs)—employers, nonprofit organizations, social services, faith-based entities, economic and workforce development organizations, and museums, libraries, credentialing services, and other lifelong learning organizations. Community-connected STEM ecosystems that engage individuals and organizations can more effectively leverage resources and expertise from strategic partners to provide seamless wrap-around support to prepare the workforce of the future. It is also important to increase work-based learning and training through educator-employer partnerships. The work world has grown increasingly reliant on schools, colleges, and other credentialing sources for job-ready graduates possessing technological, collaborative, and problem finding and solving skills. By working together to adjust to rapidly changing career readiness standards and expectations and shape curriculum and instruction, educator-employer partnerships have the potential to achieve more than can be accomplished by these players working independently. Finally, different elements of the STEM education ecosystem often develop approaches that may seem specific to the learning environment (e.g., informal versus formal), but in fact may prove effective in others. Partnerships can be an effective means for blending best practices so that STEM education is consistently high quality across education experiences.

There are three objectives under this pathway:

- Foster STEM Ecosystems that Unite Communities
- Increase Work-Based Learning and Training through Educator-Employer Partnerships
- Blend Successful Practices from Across the Learning Landscape

Foster STEM Ecosystems that Unite Communities

STEM ecosystems engage educators and individuals within and outside a formal educational setting, and include, among others, families; school districts; State, local, and Tribal governments; the Federal Government and Federal facilities; libraries; museums and science centers; community colleges, technical schools, and universities; community groups and clubs; foundations and nonprofits; faith-based organizations; and businesses. STEM ecosystems focus on long-term, shared, sustainable, and flexible STEM missions that bridge, integrate, and strengthen the learning opportunities offered by organizations across sectors compared with isolated, independent entities. Ecosystem partners are not bound by geographic boundaries and can broadly involve individuals and organizations in both physical and virtual engagement to create STEM communities that expand from local to global.

Every stakeholder addressed in this document would be a natural contributor to a STEM ecosystem. Elected officials, school and college administrators, nonprofit directors, faith leaders, and business executives are often ideally situated to organize and foster ecosystems where none yet exist. In and out-of-school educators communicating with employers and families through ecosystems can build wrap-around support systems beneficial to learners.

The broad and inclusive engagement that develops through partnerships within a healthy STEM ecosystem builds stronger, more informed communities, producing a more diverse workforce with the skills needed by local employers. Such communities provide a more supportive network for learners to pursue varied pathways in STEM education and training throughout their lives, making technical careers more accessible to a broader and more varied group of people. STEM ecosystems foster partnerships between educators and employers for co-developing curricula that incorporate real-world challenges and thereby pique more learners' interests in STEM careers and better prepare them for success in the future workforce. Effective STEM ecosystems incorporate STEM learning seamlessly, delivering it to a wide, varied group of learners where they are.

STEM ecosystems also foster inclusive environments by bringing together professionals who interact with learners at critical transition points in their preparatory pathways, including educators across preK-12, informal education (such as 4-H youth development programs), community college and university faculty (including at HBCUs and HSIs), employers, and community advocates. Effective STEM ecosystems can dramatically expand the network of diverse adult educators and professionals available to mentor and interact with learners, helping learners see themselves as future STEM practitioners and experience with the mentor how diverse groups tackle challenges.

The Federal Government advances the development of STEM education ecosystems through its programs, investments, and activities that leverage partnership commitments across business and other organizations with educational institutions. As more STEM ecosystems are cultivated, research regarding effective practices will inform the Federal Government's promotion of evidence-based strategies. Federal grant-making agencies can accelerate the expansion of community STEM ecosystems by incorporating the creation of, or connection to, an ecosystem as part of funded projects and support efforts aimed at building capacity and equipping educators and researchers with the knowledge and skills necessary to lead STEM ecosystems.

Key Federal actions needed to achieve this objective include:

- Establish additional connections between Federal STEM professionals and Federal facilities and local and regional STEM ecosystems to provide additional opportunities for mentorship, educator professional development, curriculum material development, and other community engagement activities.

- Establish a single, searchable, user-friendly online resource for finding STEM education-related Federal activities and funding opportunities (using a new or enhanced platform).
- Increase the number of Federal funding opportunities that include STEM ecosystem engagement or development as an award selection criterion.
- Support intramural and extramural research on factors that influence the success of STEM ecosystems and disseminate successful practices.

Increase Work-Based Learning and Training through Educator-Employer Partnerships

Strategic partnerships that promote work-based learning (WBL) experiences offer powerful, relevant ways to ensure that STEM learning is authentic and engaging, and that learners are prepared to succeed in the modern workforce. Learners who have access to WBL opportunities—ranging from elementary school workplace visits, to secondary pre-apprenticeships, to skilled trade apprenticeships, to research experiences and internships for undergraduates and graduate students—are better prepared to transition into the skilled workforce. Although WBL policies and practices vary widely across the country, communities can consider adopting components and promising practices that include a consensus definition of WBL, a strategic plan, a coordination entity, outreach strategies, and clear communication.

Employers can also benefit by partnering with educators to provide authentic, real-world job challenges to a broad community of learners. As collaborative partners, educators and students from different backgrounds and with different experiences bring fresh perspectives and collective knowledge to the task at hand, helping employers to develop an idea, create a prototype, or solve a vexing problem. Internships for students and externships for educators can bring varied perspectives to the workplace; and research shows that diverse groups outperform more homogeneous groups, especially when it comes to creativity and innovation.[33] Employers who partner with educators are also

Fostering Partnerships to Ensure Broader Participation in STEM

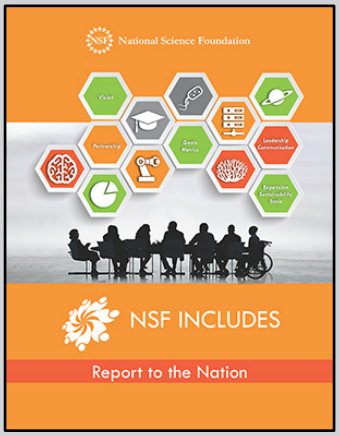

Through initiatives such as the National Science Foundation's (NSF) Inclusion across the Nation of Communities of Learners of Underrepresented Discoverers in Engineering and Science (INCLUDES) program, Federal agencies are supporting the development and growth of STEM ecosystems that bring together school systems, colleges, and businesses to broaden participation in STEM careers. In one such program, computer science faculty members at San Francisco State University have partnered with the San Francisco Unified School District to design K-12 computer science curriculum and provide professional development for teachers. For those students who go on to pursue computer science-related majors at San Francisco State University, particularly at-risk undergraduates receive intensive mentoring during their first two semesters and have access to supplemental instructional workshops designed to help retain students through difficult "bottleneck" computer science courses. As students are preparing to enter the workforce, partnerships with the San Francisco Chamber of Commerce and other local groups provide job coaching and internships.

https://www.nsf.gov/news/special_reports/nsfincludes/index.jsp

[33] https://www.nap.edu/catalog/19007/enhancing-the-effectiveness-of-team-science

Naval Research Laboratory Partnerships with Colleges and Universities

For more than 25 years, the Naval Research Laboratory (NRL) has partnered with colleges and universities to provide summer internships to undergraduate students, including students attending HBCUs. Working with NRL investigators, students participate in hands-on research and development. Through this partnership, interns have the opportunity to explore future educational and employment opportunities while undertaking projects spanning the wide variety of fields related to defense, including materials science and engineering, chemical and biochemical engineering, aerospace engineering, physics, synthetic chemistry, biochemistry, molecular biology, computer science, mathematics, mechanical engineering, and electrical engineering.

https://www.nrl.navy.mil/careers/students/nreip/

Image: https://www.nrl.navy.mil/hbcu/

more effective at reducing STEM skills gaps.[34] Finally, employers benefit from better-prepared employees if they collaborate as a sector to develop career pathways where the training required to obtain needed credentials is integrated into secondary and post-secondary coursework; support cutting-edge curriculum development; and provide apprenticeships, mentorships, internships, and other WBL opportunities.

Federal agencies invest significantly in WBL for students and educators across the Nation in the form of internships, apprenticeships, on-the-job training, externships, and other cooperative employer-educator partnerships. Agencies also provide both human and financial resources that leverage Federal laboratories, equipment, research projects, expertise, and data to provide high-quality workforce training experiences. Federal agencies can expand their work with educators and employers to facilitate partnerships that leverage physical and virtual resources across programs, including those focused on two- and four-year HBCUs and HSIs and other higher education institutions, as well as preK-12 informal and formal education.

Key Federal actions needed to achieve this objective include:

- Expand the availability of high-quality, paid internships and apprenticeships within Federal agencies and ensure that mentors are trained to provide effective educational experiences.
- Increase the use of the flexible hiring authorities provided by the Federal Pathways employment program, expedite the conversion of Pathways employees to competitive service positions, and quickly begin to use the recently expanded direct and expedited hiring authorities,[35,36] with a focus on creating a more diverse Federal STEM workforce.
- Increase the number of Federal funding opportunities that explicitly include the use of WBL partnerships as an award selection criterion, including opportunities for educators to broaden their skills through WBL outside the classroom.
- Develop new hiring authorities to convert apprentices, interns, postdoctoral fellows, and others participating in WBL programs to full-time, permanent Federal employment.

[34] For example, see https://www.whitehouse.gov/wp-content/uploads/2018/07/Addressing-Americas-Reskilling-Challenge.pdf.

[35] https://chcoc.gov/content/announcing-government-wide-direct-hire-appointing-authorities

[36] https://www.congress.gov/bill/115th-congress/house-bill/5515/text/enr; see Title XI—Civilian Personnel Matters.

Learning Through Doing: Applying Agricultural Science on the Dairy Farm

To bolster rural economies and communities and help ensure that the Nation has enough dairy farmers to replace those retiring, in 2010 the Department of Agriculture (USDA) supported the development of a three-year Dairy Grazing Apprenticeship to pair aspiring dairy farmers with experienced ones. Now recognized as a formal apprenticeship by the Department of Labor (DOL), the program allows participants to combine paid, hands-on experience on dairy farms that practice environmentally-friendly managed grazing with formal and informal education in areas such as soil and pasture management and sustainable agriculture practices.

https://www.dga-national.org/

Image: https://www.dga-national.org/files/outreach-materials/DGA_GeneralProgramBrochure_trifold.pdf

Blend Successful Practices from Across the Learning Landscape

Creative, blended educational opportunities that combine elements from traditionally separate approaches to learning—e.g., formal-plus-informal, career and technical education-plus-college preparatory—and are aligned across the scope of learning partners—result in learners gaining and building their skills in ways that work best. The future, more diverse, pool of work-ready, STEM-literate Americans will come through many pathways.[37] About half of the students who pursue higher education are likely to start at a community college, with the other half entering a four-year college or university. Virtually all of them will have enjoyed informal STEM educational experiences through local clubs, Scouts, or other out-of-school providers, or by visiting science centers, museums, zoos, nature centers, aquariums, libraries, and other community informal educational assets across the Nation. Each of these contributors will better prepare their learners if they connect and coordinate with others. One example of a partnership creating and disseminating blended practices is between the National Science Teachers Association and the Association of Science-Technology Centers (in this case funded by a philanthropic organization, not the Federal Government). Their "Connected Science Learning" is an online community sharing effective practices and research for bridging the gap between in-school and out-of-school settings.[38]

Education systems that combine high-quality career and technical training with college preparatory curriculum are particularly effective at preparing students for both employment and post-secondary study, especially when training required to obtain industry-recognized credentials is embedded in the coursework. Such systems blend the successful practice of experiential "ah-ha" moments that characterize informal education, applied learning that characterizes career and technical education (CTE), and interdisciplinary connections made through formal (typically college preparatory) coursework. Regardless of approach, the STEM technical workforce of the future depends on collaboration across the missions of preparatory organizations and others to identify ways to blend practices, programs, and resources to better meet the needs of the STEM education stakeholders.

[37] https://www.nap.edu/catalog/21739/barriers-and-opportunities-for-2-year-and-4-year-stem-degrees

[38] http://csl.nsta.org/

High School Apprenticeships: Making A Difference

By supporting apprenticeship programs in STEM-related fields, DOL and other Federal agencies are connecting students, educators, and employers in mutually beneficial collaborations. Students have a chance to explore career pathways, schools find a new way to engage students and connect post-secondary education with careers, and businesses are provided with a population of skilled workers to meet their needs. In Charleston, SC, for example, Shannon Brennan was part of the first group of high school students to undertake an apprenticeship in industrial mechanics. Through this Registered Apprenticeship program with DOL, Shannon took relevant courses at Trident Technical College and worked part-time at Cummins Turbo Technologies. After graduating from high school and taking a full-time position at Cummins, she continued taking classes at Trident Technical College, receiving tuition assistance from the Charleston Metro Chamber of Commerce. At just 19, Shannon was able to buy her first house, and at 20 she was promoted to Manufacturing Engineering Technician at Cummins.

https://www.dol.gov/apprenticeship/high-school/

Image: https://www.dol.gov/apprenticeship/high-school/pdf/Charleston_SC_Youth_Case_Study-FINAL_20180830.pdf

Federal agencies should continue to support collaborations among core academic and technical educators in both formal and informal learning environments and endeavor to further unite stakeholders from across the learning landscape. Federal agencies can help post-secondary institutions better align their programs with secondary school STEM and CTE curricula through meetings and workshops, studies, and grant funding. For example, programs could be better aligned for students to earn more dual or concurrent course credits through secondary and CTE curricula and avoid having to retake similar courses at post-secondary institutions. Education policy leaders should lower the barriers that keep educators from working across subject matter disciplines and from shifting between formal and informal settings.

Key Federal actions needed to achieve this objective include:

- Prioritize Federal support for STEM educator "upskilling" and professional development, including CTE and college preparatory teachers and educators working in both formal and informal settings.
- Prioritize research on the most effective approaches for blending successful learning practices across formal and informal and college preparatory and CTE settings.
- Convene stakeholders through webinars, workshops, and other mechanisms to share effective approaches for blending successful learning practices, and to develop guidance for educators on scaling and replicating best practices.

STEM Educators Behind the Scenes at the Smithsonian

Every summer, the Smithsonian Science Education Academies for Teachers offer hands-on, tuition-based professional development experiences for STEM educators. Over a week-long period, educators from both formal and informal educational settings go behind the scenes at Smithsonian museums and research centers, Federal agencies, and other sites in the Washington, DC, area and engage in authentic STEM experiences focused on a particular topic. Recent Academy sessions developed by the Smithsonian Science Education Center have focused on biodiversity, innovations in energy, and the Earth's fossil history. Following their Smithsonian experience, the majority of participating teachers reported that they learned better ways to present science concepts to their students and gained confidence in integrating new activities into their teaching; nearly three-quarters noted an increase in student engagement during science class.

https://ssec.si.edu/tags/sseats

Image: https://ssec.si.edu/stemvisions-blog/smithsonian-science-education-academy-teachers-sseat-earths-history-and-global

Engage Students where Disciplines Converge

The most transformative discoveries and innovations take place at the junctures where disciplines converge. Discovery and innovation will be catalyzed by an education system that integrates knowledge and methods across STEM, the arts, and the humanities and requires students to ask and answer questions crossing traditional disciplinary boundary lines. Moreover, the modern workplace itself is convergent; people with different perspectives, life experiences, knowledge, and understandings innovate and drive work forward in ways that monolithic groups often cannot. America stands to benefit from education systems that produce STEM-literate talent capable of asking and answering meaningful local or global questions that blur disciplinary boundaries. STEM education that fosters a culture of convergence encourages the integration of knowledge and the creation of innovative solutions to intriguing and naturally complex challenges—a learning approach that is more inclusive and can draw a broader range of talent into STEM fields.

This pathway highlights convergent approaches that include innovation and entrepreneurship education to develop broad thinkers better able to succeed in a rapidly changing world. Additionally, an effective education in this new landscape rests on learners' ability to apply logic and mathematical principles to societal questions. Furthermore, the convergence and application of knowledge across disciplinary boundaries, both within and beyond traditional STEM fields, is a powerful way to address complex, real-world problems.

There are three objectives under this pathway:

- Advance Innovation and Entrepreneurship Education
- Make Mathematics a Magnet
- Encourage Transdisciplinary Learning

Advance Innovation and Entrepreneurship Education

Innovation generally depends on a convergence of ideas at the intersection of different fields and sectors to produce new products or processes. It often derives from and/or leads to scientific discovery. Entrepreneurship leverages and applies innovation to introduce new processes, services, and products into the marketplace and society. In an increasingly competitive global economy, STEM education that emphasizes convergent processes and promotes problem-finding and creativity is needed to accelerate innovation and entrepreneurship. Education in these critical skills should play a larger role in STEM courses for learners from all demographics and communities to provide a pathway for more Americans to contribute to the Nation's dynamic economy.

Innovation and entrepreneurship are critically important to U.S. competitiveness and security. To keep pace with our competitors, U.S. companies must remain on the forefront of new discoveries and be able to efficiently transfer new technologies into products and services. The U.S. STEM community has a leadership opportunity in strengthening learners' abilities to create and compete in the future economy through inclusive strategies in preK-12, higher education, and informal learning environments that nurture and support innovation and entrepreneurship skills.

Competitions such as science fairs, cybersecurity contests, robotics and invention challenges, and mathematical gaming, including some supported by Federal agencies, are another way to engage students at all levels in real-world, applied, experiential learning, and have been catalysts for the careers of some our Nation's most well-respected scientists, engineers, and entrepreneurs. However, sponsors and supporters must make a greater effort to make such competitions appeal to and be accessible to all members of the community.

Federal agencies advance innovation and entrepreneurship education through various means including financial support, coordination, and facilitation of programs. They develop and conduct professional development programs for educators to incorporate innovation and entrepreneurship into curricula. The Federal Government also promotes innovation and entrepreneurship at the post-

National Summer Teacher Institute on Innovation, STEM, and Intellectual Property

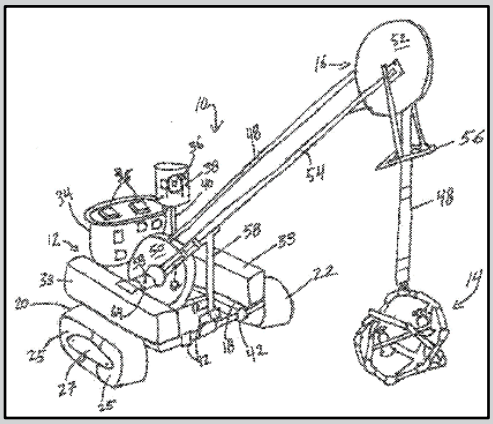

To foster innovation and entrepreneurship in STEM fields, the U.S. Patent and Trademark Office offers an immersive, multi-day interdisciplinary professional development experience to help K-12 educators become more knowledgeable about how the invention process works and the important role that intellectual property—patents, trademarks, copyrights, and trade secrets—plays in innovation and entrepreneurship. Following his experience in one of these summer institutes, Massachusetts engineering and robotics teacher Doug Scott modified his approach to teaching and was better able to guide a group of his students as they filed for and received a U.S. patent for their ice search and rescue underwater robotic vehicle. Today, when students in his classes work to identify solutions to engineering problems, their assignments routinely include researching existing patents and considering how to protect and market their intellectual property.

https://www.uspto.gov/learning-and-resources/outreach-and-education/national-summer-teacher-institute

Image: http://pdfpiw.uspto.gov/.piw?Docid=09511833

DEBUT Challenge at NIH

To spur teams of undergraduate students to focus on solving real-world problems in healthcare, the National Institute of Biomedical Imaging and Bioengineering at the National Institutes of Health (NIH) partnered with VentureWell to launch the Design by Biomedical Undergraduate Teams (DEBUT) Challenge. In the course of the annual competition, teams develop working prototypes of their solutions, which are evaluated on their market potential, economic feasibility, and patentability. Judges also consider whether the team demonstrated analytical, design, and technical communication skills. Over the past few years, prize-winning teams have developed new tools for diagnosing tuberculosis and Alzheimer's disease (shown in the image) and a specialized retractor to protect healthy tissue during brain surgery. Two participants in the 2012 Challenge, who developed a smartphone tool to help patients with asthma and chronic obstructive pulmonary disease monitor their lung function, have since founded a company to produce their device, and were named to the Forbes "30 Under 30" list.

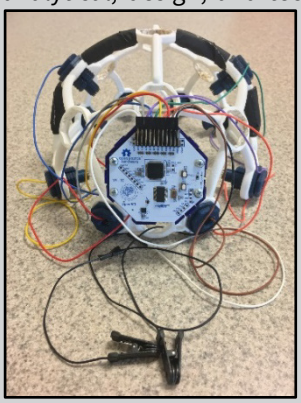

https://www.nibib.nih.gov/training-careers/undergraduate-graduate/design-biomedical-undergraduate-teams-debut-challenge

Image: https://www.nibib.nih.gov/training-careers/undergraduate-graduate/design-biomedical-undergraduate-teams-debut-challenge/2017-debut-challenge-winners

secondary level through programs such as NSF's Innovation Corps (I-Corps™).[39] Across all of their programs, investments, and activities, agencies should ensure that partners and grantees make equitable access to these opportunities a priority.

Key Federal actions needed to achieve this objective include:

- Review participation rates in federally funded competitions, challenges, and citizen science projects and apply best practices to attract a more diverse and inclusive community of participants where needed.
- Within Federal education and entrepreneurship investments, include support for activities that teach educators effective methods for making entrepreneurship education more inclusive and increasing the participation of underrepresented groups.
- Within Federal education and entrepreneurship investments, include support for activities that teach educators about the creation as well as the protection of intellectual property.

Make Mathematics a Magnet

Mathematics and statistics are foundational to success across all STEM fields of study, providing a universal language to describe and reason about models of real-world phenomena. Despite efforts to close the gap, U.S. students continue to lag behind international students in mathematics literacy.[40] One promising practice to improving mathematics literacy is the integration of mathematics across disciplines, teaching mathematics through experiential, meaningful, and applied contexts. Students who learn mathematics and statistics in context, with emphasis on logic, reasoning, and critical thinking, are more adept mathematical thinkers, and more able to apply mathematics to solve

[39] https://www.nsf.gov/i-corps

[40] https://www.nsf.gov/statistics/2018/nsb20181/report/sections/elementary-and-secondary-mathematics-and-science-education/student-learning-in-mathematics-and-science#international-comparisons-of-mathematics-and-science-performance

problems during their everyday lives. Data science, modeling, and problem-based learning can be particularly powerful mechanisms for integrating mathematics contextually.

Mathematics continues to serve as a gateway to STEM majors that leads to higher-paying jobs and economic mobility. However, those jobs are more accessible to some learners than others. For underrepresented learners especially, mathematics courses are a significant barrier to STEM degree completion. Therefore, it is imperative that innovative and tailored approaches be developed for teaching mathematics at all levels. For the United States to produce a vibrant, diverse wave of talent for the future of STEM, mathematics must foster interest in and enthusiasm for science, technology, and engineering, drawing learners more deeply into these subjects—serving as a magnet, not a barrier, to further study. Contextual mathematics and statistics teaching will help achieve this objective.

Federal agencies and departments have a number of tools at their disposal for advancing contextual, applied, meaningful mathematics education. Those that conduct and support R&D fund vital work in mathematics, informing today's most promising practices. Federal agencies and departments that support STEM R&D have an opportunity to advance this objective by sharing expertise, content, or experiences that demonstrate the contextual application of mathematics with learners and teachers.

Weather Prediction: It's Math!

Every day the National Oceanic and Atmospheric Administration (NOAA) collects and organizes billions of Earth observations such as temperature, air pressure, moisture, wind speed, and water levels. All these observations are represented by numbers. Supercomputers plug these observations into a series of mathematical algorithms that represent the physical properties of the atmosphere and allow meteorologists to predict the weather up to 16 days into the future. The American Meteorological Society (AMS) and NOAA have teamed up to help educators and students across the country understand how weather prediction happens through teacher professional development courses. Weather affects everyone, so it is a great way to make learning relevant to students. One of the teacher participants observed, "I believe that when students have access to relevant data, news, and imagery they will be more interested and that as a result their science/math skills will dramatically improve."

Teachers taking these courses apply interpolation skills by analyzing their own weather maps, gaining an understanding of numerical modeling and learning how numerical models are related to statistical tools. They learn to explain how descriptive statistics are used in scientific investigations and how to assess which graphical descriptions are most useful for displaying data. The teachers also use skills including probability analysis, estimation, and spatial analysis to understand what the weather impacts will be. More than 21,000 educators have taken AMS professional development courses to date, earning graduate credits and becoming more confident Earth science educators.

https://www.noaa.gov/opportunities/educator-opportunities

https://www.ametsoc.org/ams/index.cfm/education-careers/education-program/k-12-teachers/

Image: https://www.calu.edu/academics/graduate/certificates/american-meteorological-society-datastreme/index.aspx

Math Pathways to Success

At community colleges, an overwhelming majority of entering students enroll in developmental mathematics classes. Historically, 80% of these students never go on to complete a college-level mathematics course, thus putting their graduation, career, and life goals at risk.

To foster student success in mathematics, NSF and other Federal agencies are partnering with educational organizations and institutions to support new ways of learning mathematics. For example, with funding from NSF, the Carnegie Foundation for the Advancement of Teaching was able to more than double the number of institutions participating in its "Math Pathways" program. Now in place at more than 70 institutions, the Math Pathways program aims to shorten the mathematics course sequence and reduce transition points for students placed in remedial mathematics; offer a curriculum relevant to students' lives and areas of study; and provide support to encourage persistence in mathematics. One branch of the program, Statway, focuses on statistics, data analysis, and causal reasoning, combining college-level statistics with developmental mathematics. The other branch, Quantway, focuses on quantitative reasoning that fulfills developmental requirements with the aim of preparing students for success in college-level mathematics. Both are taught using a research-based approach focused on collaboration that fosters deeper learning and community building in the classroom. Research on the impact of Statway and Quantway shows that over the last six years participating students have been earning college-level mathematics credit at triple the previous rates and in half the time as in the years preceding the program.

https://www.nsf.gov/awardsearch/showAward?AWD_ID=1820830

Image: https://carnegiemathpathways.org/fostering-learning-community-suny-math-pathways-spring-forum/

Key Federal actions needed to achieve this objective include:

- Make Federal data more accessible for use in mathematics, statistics, and other STEM education courses, in user-friendly formats and accompanied by suggestions on how such data could be used in lessons.
- Prioritize support for programs and partnerships that integrate mathematics and statistics education in meaningful and applied contexts, including for educator upskilling.
- Identify and share mathematics and statistics education practices shown to retain diverse learners.

Connecting the People and Tools for Transdisciplinary Learning

The National Aeronautics and Space Administration (NASA) National Space Grant College and Fellowship Program (Space Grant) has connected the people and tools to conduct innovative, transdisciplinary learning for almost 30 years. Space Grant brings together academia, industry, Federal, State, and local governments, museums, and nonprofit organizations within 50 states and 2 territories through direct student awards and support for higher educational programs tailored to each State's specific workforce development challenges.

Space Grant has over 850 partnering affiliate institutions across the Nation, including HBCUs, HSIs, and community colleges, and also engages with K-12 schools to encourage participation in STEM careers. Space Grant programs encourage transdisciplinary learning through hands-on activities, challenges, and fellowships that are educating the next generation of aerospace-trained workers.

For example, Louisiana Space Grant manages the High Altitude Student Platform (HASP), where undergraduate and graduate student teams use high-altitude balloons to develop real-world science and engineering project development skills across multiple disciplines. Programs like HASP not only provide direct hands-on activities, but also develop the soft skills necessary to succeed in the workforce, such as effective team dynamics and communications.

https://www.nasa.gov/offices/education/programs/national/spacegrant/about/index.html

Image: https://www.nasa.gov/centers/wallops/education/students/opportunities/hasp/index.html

Encourage Transdisciplinary Learning

Problems that are relevant to people's lives, communities, or society as a whole often cross disciplinary boundaries, making them inherently engaging and interesting. The transdisciplinary integration of STEM teaching and learning across STEM fields and with other fields such as the humanities and the arts enriches all fields and draws learners to authentic challenges from local to global in scale. Engagement in transdisciplinary study also promotes a fuller appreciation of the intrinsic value of STEM. Learning by solving personally engaging problems in teams is effective at every level of education and in every venue, from classroom to community.

In order to conduct transdisciplinary or convergence research, scientists and engineers require a varied toolset that includes deep disciplinary knowledge, an acquaintance with the language and culture of the disciplines of their potential collaborators, and collaboration skills such as communication, ability to work with other people, critical thinking, analysis, and initiative. Early exposure to trans-disciplinary problem-finding and problem-solving gives learners these tools. Trans-disciplinary research itself also benefits when

Combining Scientific Information and Data Collection with Traditional Knowledge

Across the Department of the Interior, programs offering STEM education for Native American children and college students foster transdisciplinary learning by blending traditional knowledge with modern science and engaging Native youth in the stewardship of their lands.

On Cape Cod, for example, middle school students from the Mashpee Wampanoag Tribe considered the traditional story of how their lands were shaped by the ancient figure of Maushop, in conjunction with details about the glacial origins of the region provided by geologists from the U.S. Geological Survey. In the course of this summer program, students were urged to compare the two accounts and look for commonalities between their traditional understanding and scientific findings on the geology and ecology of the Cape Cod region.

https://soundwaves.usgs.gov/2012/12/outreach.html

people with different kinds of expertise and backgrounds work together in teams, with greater team diversity enhancing its effectiveness.

Federal agencies' support for transdisciplinary STEM education is an outgrowth or component of mission research. Many Federal agencies conduct research specific to their missions, the results of which can be translated into innovations and educational resources at many levels, including preK-12. Agencies also support STEM learners studying transdisciplinary problems through fellowships, scholarships, grants, and training. Undergraduates, graduate students, and postdoctoral fellows partaking in these opportunities gain first-hand insight into how transdisciplinary science and engineering is conducted, and learn about intellectual flexibility, communication, and teamwork.

Key Federal actions needed to achieve this objective include:

- Support research, development, and dissemination of effective transdisciplinary STEM education practices, programs, and policies.
- Expand support for STEM learners studying transdisciplinary problems through internships, fellowships, scholarships, and other training opportunities.
- Ensure that Federal activities in support of the recruitment, preparation, retention, and up-skilling of STEM educators incorporate or reflect transdisciplinary approaches featuring teaching that focuses on local and global community questions.

Build Computational Literacy

Society has been wholly transformed by digital devices and the internet. Fully and safely benefiting from this pervasive technology requires at least a basic level of understanding, or "digital literacy." Effectively using computers or computational tools for activities such as website creation, video editing, three-dimensional printing, or operating manufacturing control systems requires a somewhat higher level of skill, or "computational literacy." Beyond these key literacies, familiarity with the power and limitations of computation and communication technology is an important facet of both STEM literacy, generally, and preparation for advanced employment. Indeed, a command of this technology is a key pathway to high-demand jobs. Today's students are tomorrow's data analysts, artificial intelligence and machine learning specialists, software and applications developers, automation technicians, quantum information scientists, and cybersecurity experts. For these reasons and more, a particularly strong area of emphasis within STEM education is computer science education. To meet the demand for these and other yet-to-be-imagined cyber-enabled jobs, our Nation will need undergraduates trained in computer science to become tomorrow's preK-12 educators, and graduate students in computer science to become researchers making discoveries that can be leveraged for the betterment of society.

In STEM education, as in other areas of our lives, computation and communication technologies are constantly evolving and creating challenges to the traditional *when*, *where*, and *what* of learning. In both formal and informal settings, and across multiple learning levels, educational technology can improve learning. All Americans need access to educational technology, to computer science, to computational thinking, to the jobs that await, and to a foundational understanding of the role and use of technology. The commitment to equitable access, including sufficient broadband for all, should transcend geography, race, gender, ethnicity, socioeconomic status, veteran status, parental education attainment, disability status, learning challenges, and other social identities so that all Americans may enjoy the benefits of, if not contribute to, further development of these advanced cyber-technologies.

This pathway includes strategies for connecting people, accessing knowledge, and building high-demand job skills. It also highlights the important research and development challenge of how to both harness the benefits of digital technology and equip Americans of all ages and backgrounds to be critical and ethical consumers and producers of data and digital communication. There are three objectives under this pathway:

- Promote Digital Literacy and Cyber Safety
- Make Computational Thinking an Integral Element of All Education
- Expand Digital Platforms for Teaching and Learning

Promote Digital Literacy and Cyber Safety

Just as literacy was a critical skill that led to better opportunities in previous centuries, digital literacy is critical for people to be successful in today's society. Digital literacy empowers people with the tools to find and discern valid information, to use data for answering questions, and to share ideas and promote collaboration. Cyber safety, a component of digital literacy involving the responsible use of information and communication technologies, including new technologies like cryptocurrency, promotes practices that all learners, workers, and members of the public should know when using digital tools. Such practices rest on core ethical and human values that honor digital data protection and respect for individual privacy. Strong digital literacy and cyber safety skills complement all levels of STEM education, contributing to the attainment of universal STEM literacy, as well as laying a strong foundation for the STEM workforce of the future.

Of particular importance for workforce development is the need to train future STEM workers in digital ethics and digital privacy around the use of data. For example, NIH, as part of its *2018 Strategic Plan for Data Science*, called for enhancing quantitative and computational training for undergraduates and graduate students, including their education in secure and ethical data use, and for enabling the development of curricula and other resources toward enhancing rigor and reproducibility of data science-based approaches.[41] Moreover, careers in cybersecurity will be in high demand to ensure that the United States maintains a long-term cybersecurity advantage,[42] and the Federal Government has identified the need for enhanced direct Federal action—as well as convening new public-private partnerships—to expand and diversify the Nation's cybersecurity workforce.[43]

The Federal Government has a critical role in promoting digital literacy and cyber safety for all, although no single Federal agency—nor even the Federal Government acting alone—can reach the full breadth of the Nation's learners, workers, and citizens. However, interagency coordination and public-private partnerships offer mechanisms for Federal agencies to work together and with other government, industry, and nonprofit organizations to better understand the social science of cyber safety, including special attention to vulnerable populations, and thereby reach all communities across the Nation. Private and public sector employers, through work-based learning partnerships, can provide authentic lessons in digital ethics, online information analysis, and cyber safety. State, local, and Tribal governments along with community nonprofits and professional organizations can also heighten the urgency of this objective among their constituencies and members.

---

[41] https://datascience.nih.gov/sites/default/files/NIH_Strategic_Plan_for_Data_Science_Final_508.pdf

[42] https://www.whitehouse.gov/presidential-actions/presidential-executive-order-strengthening-cybersecurity-federal-networks-critical-infrastructure/

[43] https://www.nist.gov/sites/default/files/documents/2018/07/24/eo_wf_report_to_potus.pdf

Training Medical Researchers in Responsible Data Management

Big data is transforming biomedical research. Across the spectrum of medical research, federally funded investigators are increasingly expected to have the skills to effectively and responsibly manage, use, and protect large and complex sets of data. The sources and nature of these data vary from electronic health records and wearable devices, to medical images, to DNA sequences. Just in the area of genomics, for example, the magnitude of this data is such that by 2025, the volume of genomics data is projected to reach or exceed that seen among the three highest current sources of data: the field of astronomy, YouTube, and Twitter.

Since the adoption of its *Strategic Plan for Data Science* in 2018, NIH has been working to ensure that the next generation of researchers is prepared to take advantage of the promise of data science for advancing human health, by making plans to routinely incorporate the teaching of computational skills and the principles of responsible data use into all of its programs for undergraduate and graduate students.

https://www.nih.gov/news-events/news-releases/nih-releases-strategic-plan-data-science

https://datascience.nih.gov/sites/default/files/NIH_Strategic_Plan_for_Data_Science_Final_508.pdf

In addition to research, coordination, and partnerships, Federal support for creating STEM content for educational purposes is critical across the entire learning landscape, including within the home. For example, the Federal Trade Commission, in support of the First Lady's Be Best campaign, is providing a guide to help parents, guardians, and other adults have thoughtful conversations with children about being safe and responsible online.[44] Finally, the rapid expansion of data science, in particular as a digital literacy-related discipline, suggests that the Federal Government should play a leading role in helping the Nation's future research workforce acquire skills related to ethical research data use. Effective training and skill-building methods remain to be developed across STEM disciplines.

Key Federal actions needed to achieve this objective include:

- Partner across Federal agencies and between Federal agencies and other stakeholders to promote digital fluency and cyber safety practices at all levels, including professional development programs for educators.
- Conduct and support fundamental and applied research on the human dimensions of cyber safety and disseminate promising practices.
- Support education and training in digital ethics and data privacy for STEM researchers from undergraduate through graduate education.

Make Computational Thinking an Integral Element of All Education

One often-cited definition of computational thinking (CT) is the thought processes involved in formulating problems and their potential solutions in ways that the solution can be effectively carried out by an information-processing agent (human or machine, or more generally, by a combination of both).[45] More colloquially, CT encompasses a set of processes that defines a problem, breaks it down into components, and develops models to solve the problem, then evaluates the result, iterates changes, and does it again. Although the concept was developed in computer science (CS), it is increasingly seen as a set of broadly valuable thinking skills that helps people solve problems, design

[44] https://www.consumer.ftc.gov/files/talking_with_kids_about_being_online_2018.pdf

[45] https://www.cs.cmu.edu/link/research-notebook-computational-thinking-what-and-why

systems, and understand human behavior, and that can be learned at a very young age without involving computer coding. In an increasingly technological and complex global economy, CT needs to be an integral element of all education, giving every learner the capacity to evaluate information, break down a problem, and develop a solution through the appropriate use of data and logic.

Developing Integrated Approaches to Teaching and Learning Computational Thinking

A team of researchers at Northwestern University, supported by grants from NSF, has been working for years to develop teaching modules and courses that infuse computational thinking skills into math and science classes at the high school level. The approach introduces a diverse range of students (including those from traditionally underrepresented groups) to computational thinking skills by using them throughout STEM courses that they are already taking. The effort incorporates summer professional development workshops and ongoing Saturday sessions to train teachers to incorporate computational thinking activities in their STEM classrooms. Through these experiences, the researchers have proposed a taxonomy of how to incorporate computational thinking into K-12 curriculum and presented best practices for curriculum development and teaching. The program has also led to follow-on research aimed at developing methods for integrating computational thinking across an entire high school's STEM curriculum.

https://www.nsf.gov/awardsearch/showAward?AWD_ID=1640201

https://www.sesp.northwestern.edu/news-center/news/2016/10/wilensky-horn-receive-2.5-million-computer-science-grant.html

While CT activities do not require the use of a computer, they do involve the requisite reasoning needed to capitalize on the use of computational tools; one can consider CT as a universally beneficial skill set at the center of CS. Beyond that center, CS includes a much broader range of understandings, competencies, and skills needed to apply computation in a digital world. CS includes topics of problem specification and representation; algorithm development; software design, programming, and debugging; the internet and networking; big data; cybersecurity; and application across a wide range of disciplines, including the associated societal impact and ethical considerations. Computer science education for all remains a national priority,[46] and this priority is more likely to be achieved through the universal integration of computational thinking across education systems.

A firm grounding in computational thinking, including through CS education, will help build a more STEM-literate public. Educating learners from an early age to think analytically about problems fosters useful skills they can carry with them throughout their lives. People use data to make decisions, understand risks, and impact society in their daily lives—from finding the best car deal to supporting a city bond measure. In addition, teaching methods that emphasize thinking skills over rote recall will draw a much more diverse set of learners into STEM fields. It is vital to be inclusive in teaching CT and CS skills even to individuals who may struggle to master these approaches, including students with disabilities, so that they, too, can fully participate in modern society.

Changes in the modern workplace require a workforce able to fill jobs using technologies and in newly emerging fields that did not exist just a few years ago. Many traditional blue-collar jobs associated with skilled trades have been replaced by jobs requiring computational literacy, especially in the manufacturing sector. Employment in computer and information technology occupations is projected to grow faster than the average for all occupations.[47] Providing all Americans with CT and CS habits of mind and practice will not only prepare them for the jobs of the future, but will also develop the next generation of innovators who will create those jobs and further America's global leadership.

[46] https://www.whitehouse.gov/articles/president-trump-signs-memorandum-stem-education-funding/

[47] https://www.bls.gov/ooh/computer-and-information-technology/home.htm

Teaching Data Science through Community Science

In the Grand Canyon, high school students are studying the insects that hatch at dusk and are a measure of ecosystem health. They will also collect invertebrates that cling to the river bottom and measure fish that feed on them. On the coast of Texas, 10th graders use geographic information system (GIS) mapping technology to mark the migration of mangroves on a barrier island, adding their data to previous years. In Iowa, high school students track soil moisture through time. Each of these is an example of a community science project. Community science projects bring together local stakeholders on a science investigation of local interest. They engage Federal partners through problem identification and data. Local government and business leaders may provide direction, materials, and mentor the student teams. Students get real-world experience, even making public presentations of their findings. When community science tackles a complex local issue, students learn the value of science, and the skills involved in STEM challenges. Students with diverse skills and interests can find their place in a community science project, making community science a pathway into STEM for some who may not have considered STEM an option.

https://education.usgs.gov/

Image: https://www.usgs.gov/centers/sbsc/science/citizen-science-light-trapping-grand-canyon

Federal education policies and programs should encourage the integration of computational thinking principles across all disciplines and activities, providing all children with opportunities to learn the basic skills of computational thinking from an early age, both in school and in informal learning environments. Agencies supporting teacher education should prioritize lesson design that incorporates CT and CS and considers these skills to be as fundamental to education as reading, writing, mathematics, and science. Teacher preparation across the STEM disciplines (and beyond) could lead the implementation of CT and CS integration. Policies and programs should foster the recruitment, preparation, and retention of computationally thinking teachers, including CS teachers, especially in high-need or hard-to-staff school districts.

Key Federal actions needed to achieve this objective include:

- Increase the number of Federal funding and partnership opportunities that include computational thinking as a selection criterion.
- Support research and disseminate best practices on effective methods for teaching computational thinking and computer science to young children as part of the STEM curriculum.
- Identify and share education practices and curriculum materials that are effective at developing computational thinking.

Expand Digital Platforms for Teaching and Learning

A growing number of educational institutions and organizations now offer open online courses, distance learning technologies, mobile learning applications, and a variety of other digital learning platforms. Such offerings challenge educators to rethink the traditional parameters of time and place related to when and where learning occurs. To realize the full benefits of these new digital technology-based learning environments will require close alignment of their goals for learning, such as learner characteristics, content or skills to be achieved, and the supports available for learners and instructors who use them.[48] Thoughtfully executed, anytime and anywhere learning can deliver high-quality STEM education and expertise widely, blurring the boundary between formal and informal learning domains.

In particular, simulation-based games, mobile platforms, virtual environments, and augmented reality tools can heighten curiosity and increase learner engagement. Dedicated learning spaces supported by online teaching tools and adaptive, embedded technologies offer educators and learners flexibility in structure, equipment, and access to materials, both in the natural world and in virtual and augmented settings. Real-time, intelligent feedback cycles can facilitate new modes of learning and collaboration among peers and educators. Moreover, as technology continues to reshape most jobs, American workers could engage in reskilling or upskilling through just-in-time digital modules, obtaining lifelong credentials. This expansion of opportunity offers the potential to reduce the access and achievement gaps across the country.[49]

Ensuring Equitable Access to Computing for Persons with Disabilities

One way the Federal Government is fostering the use of digital platforms for learning is by supporting initiatives such as the Alliance for Access to Computing Careers, which seeks to increase the participation of people with disabilities in computing. Supported by an NSF grant to the University of Washington, the Alliance helps students with disabilities successfully pursue undergraduate and graduate degrees in computing fields, and works to increase the capacity of postsecondary institutions, employers, and other organizations to include students with disabilities in computing courses, internships, and other opportunities.

https://www.nsf.gov/awardsearch/showAward?AWD_ID=1834924

Image: https://www.washington.edu/accesscomputing/resources-home (AC-pageimages003.png)

Digital platforms for teaching and learning can support diversity and inclusion in STEM education as well, by providing more equitable access to STEM learning opportunities. Conversely, technology can also exacerbate existing inequalities through disparities in access. To ensure the accessibility of high-quality, cutting-edge digital STEM learning tools to all learners, especially from underserved communities and those underrepresented in STEM, cost and connectivity must be considered. For example, as of 2016, approximately 24 million Americans lacked access to fixed land-based, minimum speed broadband service, with access disproportionately lacking in rural America and Tribal lands.[50] It is a national priority that these gaps be addressed.

[48] https://www.nap.edu/catalog/24783/how-people-learn-ii-learners-contexts-and-cultures

[49] https://tech.ed.gov/netp/

[50] https://www.fcc.gov/reports-research/reports/broadband-progress-reports/2018-broadband-deployment-report

Expanding STEM Education in Rural Oklahoma

In remote rural areas, access to opportunities for STEM education may be limited—a particular challenge in the era of high-technology farming, where drones, computerization, and GPS technology are becoming prerequisites to staying competitive. USDA, along with other Federal agencies, is helping to overcome those barriers through support for the tools and technologies required for distance learning.

For example, a USDA grant to Redlands Community College in Oklahoma allowed the college to partner with rural school districts in central and western Oklahoma using distance learning technologies. Today, the Redlands' distance learning program provides live instruction to 29 sites, including 19 Tribal schools and three high schools.

https://www.rd.usda.gov/programs-services/distance-learning-telemedicine-grants

https://www.rd.usda.gov/newsroom/news-release/national-rural-health-day-usda-announces-234-million-distance-learning-and-1

Federal agencies should continue to support R&D leading to new and improved digital platforms for teaching and learning and assess the scalability of successful pilots. Programs and activities should encourage the coupling of tool development with curricular innovation and associated educator professional development to help overcome the barriers associated with the adoption and effective use of digital tools. The Federal Government should further facilitate public-private partnerships to extend broadband internet access to high-need communities and help to establish and scale online credentialing and retraining platforms that aid worker adaptation to the digital economy.

Key Federal actions needed to achieve this objective include:

- Expand research on and support for development of curricula using digital tools and universal design principles.
- Sponsor, participate in, and/or encourage workshops, hack-a-thons, and other activities that bring together communities of practice and train STEM educators on how to most effectively use digital tools and learning models.
- Identify and prioritize support for practices and learning models for distance learning that most effectively reach underserved and rural populations.

Operate with Transparency and Accountability

Transparency requires that the Federal agencies share how they are maximizing outcomes of Federal STEM investments and activities in support of this plan and ensuring broad benefit to the public. The Administration's vision of a results-driven Government requires agencies to be accountable for the programs and services that they deliver. Accountability depends upon a commitment to measuring results and collecting data that identify effective practices. Accountability is enhanced when there are core capabilities for evaluation, including adaptive data infrastructures. It also requires the development of tools that allow data to be readily accessed and transformed into evidence that informs Federal action and improves the effectiveness of Federal programs.[51] Transparency and accountability, therefore, are central tenets of this plan.

This pathway lays out the interagency efforts to create the capabilities and infrastructure necessary to achieve transparency and accountability and thereby maximize benefits to the public of Federal STEM education policies and investments. There are five objectives under this pathway:

[51] https://www.whitehouse.gov/wp-content/uploads/2018/02/ap_6_evidence-fy2019.pdf

- Leverage and Scale Evidence-Based Practices Across STEM Communities
- Report Participation Rates of Underrepresented Groups
- Use Common Metrics to Measure Progress
- Make Program Performance and Outcomes Publicly Available
- Develop a Federal Implementation Plan and Track Progress

Outcomes of the Federal Government's actions under each objective can be measured to understand the impact of agencies' activities and progress toward meeting the goals of this plan. Progress, impact, and success can be measured both qualitatively and quantitatively. The specifics of the metrics and measures of success will derive from the actions of each agency as it implements the plan, consistent with its mission and the availability of funds.

Leverage and Scale Evidence-Based Practices Across STEM Communities

Evidence on what STEM education programs and practices work for whom and under what conditions can be found across a range of studies, from early knowledge-generating studies, to design and development projects, to rigorous impact evaluations and full-scale implementation of programs, policies, or practices.[52] For example, the What Works Clearinghouse[53] and the NSF-supported Center for the Advancement of Informal Science Education[54] and Center for Innovative Research in Cyber Learning[55] disseminate information regarding programs, research, and other STEM education-related products. Federal agencies that support STEM education will identify additional promising, evidence-based programs, practices, and policies developed from public or private investments to further learn from, leverage, and implement more broadly.

Evidence-Based Grant Management

To encourage wider adoption of evidence-based practices in education, including STEM education, ED has adopted an approach to grant management that emphasizes evidence of effectiveness in the evaluation of grant applications. Applicants for major grants to implement educational interventions through the Education Innovation and Research program must document the proposed intervention's effectiveness in their applications. Through this approach, ED is catalyzing the implementation of practices that have a demonstrated impact on improving student educational outcomes and the use of evidence-based practices in K-12 education in general.

https://innovation.ed.gov/what-we-do/innovation/education-innovation-and-research-eir/

In order to be responsible stewards of taxpayer dollars, Federal agencies will perform a systematic review of data-derived evidence from current programs to leverage and build on high-performing existing work. In addition, Federal agencies will work together to ensure that their efforts are making a measurable difference for learners, educators, and the Nation. These efforts include identifying cross-cutting metrics that agencies will hold themselves accountable for achieving.

Stakeholders outside of the Federal Government also play an essential role in contributing to the evidence base. Evidence produced by non-governmental researchers, philanthropic organizations, academia, industry, and other stakeholders can influence STEM education programs, practices, and policies. Therefore, it is important for evidence to be shared broadly and made accessible to all stakeholders invested in improving and advancing STEM education.

[52] https://www.cep.gov/content/dam/cep/report/cep-final-report.pdf

[53] https://ies.ed.gov/ncee/wwc/

[54] http://www.informalscience.org/

[55] https://circlcenter.org/

What Works in Education

To provide educators with the information they need to make evidence-based decisions, ED created the "What Works Clearinghouse" to answer questions about what works in education. For more than 15 years, the clearinghouse has reviewed existing research on educational programs, products, practices, and policies and shared its findings with educators and the public. Of particular interest to STEM educators are the clearinghouse's extensive reviews of approaches to math and science education, as well as interventions designed to help students transition between high school and higher education and careers.

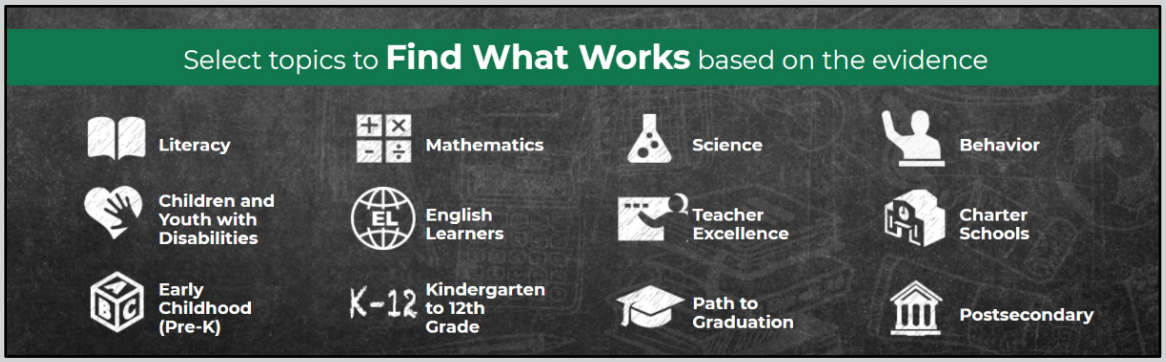

https://ies.ed.gov/ncee/wwc

In reviewing the evidence base, however, careful attention should be paid to the setting, population, and context in which learning takes place, as described in the 2013 Common Guidelines for Education Research and Development.[56] To successfully scale and implement programs broadly, a solid understanding of how the program works and for whom it was designed is critical. Understanding the settings and contexts under which effective learning takes place, and documenting and disseminating this information broadly, fosters a more diverse and inclusive STEM community and supports the uptake of programs, practices, and policies that are likely to improve STEM learning and engagement.

After a promising STEM education program, practice, or policy is identified, Federal agencies should build on the existing evidence base and leverage agency resources and funding mechanisms, as available, to scale and implement it more broadly. For example, ED, through its Education Innovation and Research program, prioritized funding to programs that have a strong, rigorous evidence base.[57] NSF's education research and development efforts also use a tiered structure to support awards of different sizes based on the study purpose and level of evidence underlying the research project types.[58]

Key Federal actions needed to achieve this objective include:

- Broadly identify and disseminate effective STEM education programs, practices, and policies, including preK-12 formal and informal, undergraduate, graduate, and lifelong learning.

[56] https://ies.ed.gov/pdf/CommonGuidelines.pdf

[57] https://innovation.ed.gov/what-we-do/innovation/education-innovation-and-research-eir/

[58] https://www.nsf.gov/pubs/2017/nsf17584/nsf17584.pdf

Report Participation Rates of Underrepresented Groups

In serving the American public, Federal agencies have a responsibility to provide broad access to their programs and to be accountable for ensuring that Federal activities are fully open and accessible to all members of the population. Tracking and reporting on the participation of various groups in Federal STEM education programs provides agencies with opportunities to gauge their effectiveness at fostering diversity and inclusion. These tracking and reporting activities are also essential to public accountability and to fulfill legislative mandates for STEM education. In particular, this plan's goal to promote diversity and inclusion in STEM depends on regular monitoring and reporting of participation rates in Federal STEM education programs.

A number of Federal agencies routinely report on the demographics of participants in many of their STEM education programs. Agencies that currently conduct valid and reliable tracking will share their promising practices across agencies so that those strategies can be replicated where and when appropriate. Subsequent activities can then focus on sharing strategies and best practices with other Federal agencies and developing guidelines for tracking and reporting by agencies, taking the following factors into consideration:

- Establish common metrics and clear mechanisms for reporting the participation rates of underrepresented groups in programs and activities supported by Federal grants and agreements.
- Establish a baseline for reporting and set goals for improvement, especially for long-standing scholarship and fellowship programs supporting degree candidates.

Documenting the Participation of Underrepresented Students in STEM Programs

The Federal Government is working to ensure that all STEM education programs are inclusive and welcoming to participants from all backgrounds. Documenting the breadth of participation has been challenging for some programs, but there are numerous success stories across the Government. For example, the Army Educational Outreach Program (AEOP) utilizes a shared definition of "underserved" across its program portfolio for consistency in reporting and a centralized application tool that captures self-reported demographics, which are analyzed by the AEOP evaluation team to determine actual underserved percentages, enabling the AEOP to document how well its STEM programs are reaching students from targeted underserved groups. Using this data, AEOP was able to determine that 38% of participants overall in its high school and undergraduate apprenticeship programs were from underserved populations in 2017.

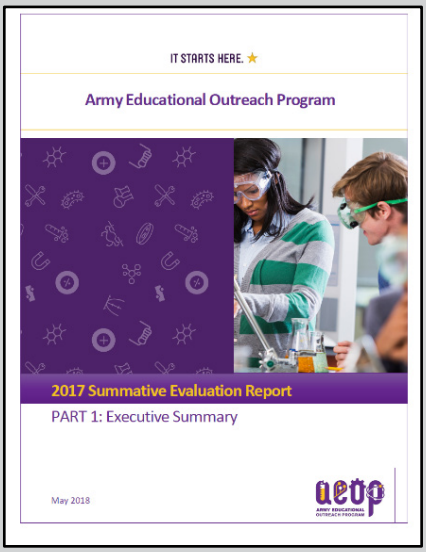

https://www.usaeop.com/about/our-impact/

Image: https://www.usaeop.com/wp-content/uploads/2018/06/FY17-AEOP-Summative-Evaluation-Report-Executive-Summary.pdf

Key Federal actions needed to achieve this objective include:

- Establish a clear baseline of current status that includes the number of agencies/programs that currently report demographic information, current participation rates of members of underrepresented/underserved groups, and documentation of agencies' commitment to broadening participation (as evident in considering legislation, strategic plans, and other supporting documentation).
- Set goals for improved reporting, particularly for formal and longer-term programs such as those that provide support towards earning a degree.
- Develop a pathway to improved tracking and reporting, with milestones.

Use Common Metrics to Measure Progress

Developing and implementing common metrics and shared measures for tracking progress towards the attainment of the goals set forth in this plan are essential to realizing the goals of cross-agency coordination and accountability in STEM education and being responsive to legislative requirements.

Sharing performance data among Federal agencies and programs with similar aims can help identify what works in STEM education, for whom, and in what contexts. It can also catalyze communication about promising practices, ultimately enhancing the effectiveness of the Federal STEM education portfolio. Likewise, the use of common metrics and data sources can enable benchmarking of Federal STEM education programs along with those in the private sector. Such benchmarking enables stakeholders in all arenas to assess their performance within a broader context. Ultimately, the adoption of common metrics will be critical to developing the evidence base to permit efficient, rigorous, and integrated assessments of the range of Federal initiatives designed to achieve the goals of this strategic plan.

A number of actions are proposed throughout this plan. In the implementation phase of the plan, agencies will work together to develop appropriate metrics for tracking progress towards the goals and objectives, taking into account the variable nature of Federal programs, investments, and activities. For example, common metrics will likely vary between formal and long-term programs, such as programs intended to lead to a STEM degree, and informal and short-term investments, such as those supporting museum exhibits, summer camps, and citizen science projects. An open, collaborative interagency process will be needed to coordinate the further development of common definitions and outcome metrics, facilitate the sharing of methods and tools for data collection, and foster discussion of potential new strategies such as the use of common identifiers and national data resources.

Where not already in place, a long-term process will be developed for Federal agencies to implement data collection and reporting mechanisms and begin to utilize the resulting information to assess their programs, investments, and activities. Expectations for reporting on common metrics and undertaking cross-agency comparisons should be consistent with the time horizon (short-term versus long-term metrics) in order to understand actual impact and to observe final outcomes.

Key Federal actions needed to achieve this objective include:

- Consistently use and report current metrics for assessing the effectiveness of Federal STEM education programs, investments, and activities.
- Develop and report additional metrics needed to measure progress towards the objectives presented in this strategic plan.

Make Program Performance and Outcomes Publicly Available

Achieving transparency requires not only common metrics that underscore how different agencies' initiatives complement and support the achievement of the Nation's STEM education goals, but also a commitment to coordinated communication about agencies' programs and their effects on STEM literacy, workforce development, and diversity in STEM. Such a commitment is critical to improving public awareness of the returns on Federal investments in STEM education and workforce development.

At a Federal level, ongoing sharing of performance outcomes across agencies supports coordinated policymaking and efficient use of resources. Ensuring that data documenting the outcomes of discrete activities, single-agency programs, or cross-agency initiatives and portfolios of investment are shared broadly can inform and stimulate new thinking about synergistic activities nationally, including through the community partnerships discussed above. By making the performance of programs, investments, and activities public, agencies can better identify areas of synergy and complementarity. They can also see gaps and emerging trends where, for example, greater efforts in diversity and inclusion are needed to achieve the goals of this plan.

Sharing Information on the Outcomes of NIH's Graduate STEM Programs

To share the outcomes of its graduate research training and fellowship programs with students, faculty, and the public, NIH has developed a dedicated chapter in its annual Data Book that includes information on degree completion rates, time to degree, and the characteristics and fields of study of Ph.D. completers. In addition to its value to evaluators and program planners, information such as this can help prospective students know what to expect during graduate school and permits NIH-funded programs to benchmark their outcomes against those of others.

https://report.nih.gov/nihdatabook/

Federal agencies are committed to documenting and sharing information both for internal strategic planning purposes and to inform public audiences. Currently, there are several mechanisms that agencies use to assess and report progress of their programs, investments, and activities. The Federal Coordination in STEM Education (FC-STEM) Subcommittee of the NSTC Committee on STEM Education (CoSTEM) and its interagency working groups provide opportunities for agencies to share best practices and lessons learned. Throughout the implementation of this strategic plan, additional emphasis will be placed on sharing of agency best practices and lessons learned and on exploring new opportunities to increase public access to performance outcomes. For example, FC-STEM will explore the feasibility of developing a publicly accessible dashboard of performance data providing evidence of the results of Federal investments. Collecting, organizing, and reporting Federal performance data supports efficient and effective use of public funding, increases public awareness of Federal program outcomes, and promotes the use of high-quality performance assessment and evaluation methods, leading to evidence-based decision making in STEM education across the Nation.

Key Federal actions needed to achieve this objective include:

- Inventory and disseminate examples and templates, best practices, and lessons learned for effectively sharing program performance, data, and outcomes with stakeholders.
- Provide a public resource for monitoring Federal program performance and outcomes, such as a dashboard that visually tracks, analyzes, and displays common performance metrics.

Develop a Federal Implementation Plan and Track Progress

Under the guidance of the FC-STEM Subcommittee, the Federal agencies engaged in STEM education will collaborate to develop a consolidated implementation plan, including additional actions to achieve the goals and objectives described in this strategic plan. The consolidated implementation plan will be delivered to the CoSTEM and the Office of Science and Technology Policy (OSTP) within 120 days of the publication of this strategic plan, and will include the following information:

- Near and long-term actions (programs, investments, and activities) that Federal agencies will undertake, including both individual and collective actions;
- The status of agency capabilities for collecting data and reporting rates of participation by women, underrepresented minorities, and persons in rural areas in such programs and activities and a plan to develop any additional capabilities needed;
- A current description of baseline data available to each agency to begin to assess progress toward achieving the goals and objectives and a plan to develop any unmet capacity for collecting the required data;
- Recommendations for common metrics that can be collected across agencies to assess progress toward the goals of this plan;
- A description of how progress made in carrying out the implementation plan will be tracked;
- A description of how the agencies will collectively or individually disseminate information about available Federal resources for STEM education practitioners, including teacher professional development programs, to State, local, and Tribal governments and to STEM education practitioners, including to school teachers and administrators; and
- A definition of STEM education programs, investments, and activities that will be used to collect annual inventory data.

In order to facilitate the development of this interagency implementation plan, an interagency group will be convened shortly after the publication of this plan to develop an implementation template for agencies to provide the information required. Using this template, the member agencies will provide to FC-STEM their agency-specific information to be incorporated into the overall Federal implementation plan. The implementation plan is intended to be a living document, with updates by FC-STEM as needed.

FC-STEM will develop an additional reporting template for collecting information needed by CoSTEM for its annual STEM education report to Congress. Agencies will provide the requested information for the prior fiscal year to FC-STEM by the end of each calendar year, beginning in 2019. The information reported will include, at a minimum and consistent with agency data collection authorities:

- An annual inventory of STEM programs;
- A summary of actions undertaken to achieve the progress toward the goals presented in this plan;
- Rates of participation by women, underrepresented minorities, and persons in rural areas in such programs and activities, using a common reporting framework;
- Descriptions of the outcomes of any program assessments completed in the previous year, and any changes made to their contribution to the implementation plan since the previous annual report;
- A summary of how the agency disseminated information on federally supported resources; and
- Any additional information requested by CoSTEM.

A Strategy for National Collaboration

The vision, goals, pathways, and objectives outlined in this Federal strategic plan will benefit from participation by the entire STEM education stakeholder community. The Federal Government has worked to align this plan with the broader goals of the national community through outreach to representatives from across the STEM enterprise, with the hope that it will serve as a nationwide call to action. This section summarizes how stakeholder input was collected during the formulation of the plan, suggests ways that other stakeholders can contribute to achieving its goals, and highlights some of the ways they might use it to develop their own plans and initiatives.

Initial Stakeholder Outreach

In drafting this plan, many mechanisms were used to solicit feedback from outside stakeholders. OSTP requested feedback from States and other outside stakeholders on how they use Federal STEM education programs, investments, and activities, and a STEM Education Advisory Panel composed of external experts was established to advise CoSTEM on matters related to STEM education. Those efforts culminated with two formal events:

- **State-Federal STEM Education Summit.** In June 2018, OSTP hosted approximately 200 stakeholders from the STEM education community representing the Federal Government, all 50 States, five Territories, and Tribal communities. As part of this two-day summit, NSF convened award-winning preK-12 and college-level STEM educators, who shared their individual perspectives on how to strengthen relations and align STEM education objectives between States, Territories, Tribal communities, and the Federal Government. [59]
- **STEM Education Advisory Panel Meeting.** In September 2018, the newly-established 18-member Federal advisory committee was convened by ED, NASA, NOAA, and NSF.[60]

Additionally, OSTP held listening sessions over the past year with a broad range of stakeholders, collecting individual input from people spanning the STEM education enterprise. Federal agencies also conducted their own outreach activities to inform their contributions to this plan.

Using This Plan

All STEM education stakeholders are encouraged to use this strategic plan to gain inspiration for their own policies, programs, and activities. The following examples illustrate some of many possible ways this plan can be employed by the wider STEM education community:

- Learners, the ultimate beneficiaries, can use the promising ideas and approaches described in the plan to inform their decisions and become advocates for their own educations;
- Parents, guardians, and caregivers can use the plan as a helpful guide for working with educators to support high-quality STEM education for their children;
- PreK-12 and informal educators and administrators can find guidance for selecting professional development options and enhancing their own abilities;
- Community college professionals can identify ways to strengthen their leadership roles in offering work-based learning opportunities through industry partnerships;

[59] https://www.whitehouse.gov/wp-content/uploads/2018/06/Summary-of-the-2018-White-House-State-Federal-STEM-Education-Summit.pdf

[60] https://nsf.gov/ehr/STEMEdAdvisory.jsp

- Four-year colleges and universities can use the objectives as fruitful lines of scholarship, useful guidelines for course design, and touchpoints for teacher preparation programs;
- Publishers and curriculum developers can use the plan as a source of new ideas for content, learning modules, and other instructional resources;
- Community and professional organizations can keep members up to date on these trends in STEM education through their communications and events;
- Government officials can craft policies that support local ecosystems and align curriculum standards and teacher professional development programs with the plan's objectives; and
- Private and public sector employers can use the plan to create investment strategies for human and financial resources.

Helping Achieve the Goals

All stakeholders are encouraged to undertake their own activities, such as those described above, to help achieve a vision for a future where all Americans will have lifelong access to high-quality STEM education and the United States will be the global leader in STEM literacy, innovation, and employment. A small sample of many possible ways for non-Federal stakeholders to help reach the goals of this plan are listed below.

Build Strong Foundations for STEM Literacy. State, Territorial, Tribal, and local communities will be central participants in extending high-quality STEM education to all Americans across all education levels and platforms. Non-Federal stakeholders are well positioned to promote digital literacy and expand digital platforms. Educators at all levels could increasingly augment hands-on instruction with online content and virtual experience, bringing the world to the classroom. Curriculum developers and teacher preparation professionals could work to accelerate the use of digital learning tools and their integration into curricula, informed by research on best practices. Private and public sector employers, through work-based learning partnerships, could provide the most authentic lessons in digital ethics, online information analysis, and cyber safety. Elected officials along with community nonprofits and professional organizations are well positioned to heighten the urgency of this priority among constituencies and members.

Elevating the importance of computational thinking to that of reading and writing skills will require effort from all stakeholders. Education administrators and policy makers could work to integrate and standardize computational thinking into pedagogical and curricular material and learner and educator credentialing programs throughout preK-12 and higher education. Teacher preparation across the STEM disciplines (and beyond) could lead this implementation. Employers that are increasingly dependent upon computationally competent new hires could emphasize the demand for these skills and partner with local colleges, universities, and schools to facilitate their instruction.

It is important for all of these efforts to identify which approaches work best. State, local, and Tribal governments as well as private sector partners could create portals for sharing their STEM education performance data and results, particularly those from Statewide Longitudinal Data Systems, to provide granular detail on students' progress. Aligning performance assessments to Federal common metrics would help greatly in comparing programs across the STEM education enterprise. Educators and administrators could explore the evidence-based practices in Federal repositories, adopt them in their own unique frameworks, and share their results with the broader community.

Increase Diversity, Equity, and Inclusion in STEM. Local STEM ecosystems dramatically expand the network of diverse adult professionals who can mentor and interact with learners. All stakeholders of the STEM education community—including educational institutions, trade organizations, local business, and community leaders—could identify ways to be active members in their local STEM ecosystems, including by contributing expertise and financial resources, holding events, and conducting outreach.

Data-driven analysis is required to assess the effectiveness of programs in attracting diverse participation and in identifying promising approaches for inclusive outreach. For STEM education programs that serve underrepresented groups, stakeholders in both the public and private sector should, when feasible and permissible by law, report participation statistics in a public and transparent way. Schools and universities already possess a wealth of demographic information for their STEM education efforts that could be useful for Federal agencies interested in identifying and analyzing promising approaches.

Organizations could also share their most effective outreach practices with Federal STEM education partners to help publicize and scale promising approaches. Partners are particularly encouraged to highlight programs that bring mathematics and statistics to life for more learners, especially those who have been underserved and are underrepresented.

Prepare the STEM Workforce for the Future. Increasing interaction between public and private sector employers will drive many positive outcomes. Vibrant local STEM ecosystems will introduce learners to professionals who can offer advice and support at critical transition points in their career pathways. Businesses and trade organizations are encouraged to engage with participants in these forums in order to provide visible conduits to employment for young learners and STEM job seekers. Policymakers could promote work-based learning through adaptable learn and earn models for students, as well as non-education work experiences for educators.

STEM workers in tomorrow's economy will benefit from transdisciplinary learning, STEM literacy, and the cultivation of a mindset that embraces innovation and entrepreneurship. For preK-12 formal and informal educators, meeting this educational need could involve exploring new methods for interdisciplinary team teaching. For school administrators and policy makers working with higher education institutions, it could mean re-examining course content and how course credits can be earned. Teacher preparatory institutions and professional developers could contribute as well by incorporating relevant material into courses and workshops. Employer partners bring practical experience to the table, and could act as a rich source of authentic problems for learners. Business and education membership organizations could communicate these goals and strategies, convene members to build capacity, collate exemplary materials, and otherwise link people and resources in local STEM ecosystems.

A Clarion Call to All Stakeholders. Successfully navigating the course for American STEM education articulated in this plan will require the creative application of many different strategies tailored to the unique needs of individual STEM ecosystems, rather than a single prescriptive approach. Alignment with these Federal objectives, however, can amplify the impact of the wider community's efforts. Although the Federal investment in U.S. STEM education is a small fraction of the total spending, the Federal Government can lead by example through this five-year strategic plan, issuing a clarion call to all stakeholders across the Nation for a shared vision of opportunity and excellence.

THE WHITE HOUSE